Theoretical and experimental investigation of microbial growth and adhesion on 3D printing material: An alternative approach for bioreactor fabrication

Master thesis

rijksuniversiteit groningen

Elmar Teeuwen

Supervisor: Prof. G.J.W. Euverink

Prof. A.Vakis

Advisor: PHD.S.Achinas

Faculty of Science and Engineering

University of Groningen

This dissertation is submitted for the degree of

Master of engineering

January 2019

Preface

This report contains the Master research project that was written to complete the Advanced Product Engineering track of the Master's degree programme of Industrial Engineering and Management (IEM) at the University of Groningen. Special thanks go out to Spyros Achinas, a PhD researcher who is part of the research group Products and Processes for Biotechnology in the Biobased Economy at the University of Groningen. He helped me during a short period of 3 months to set up a proper research report. Spyros and I discussed about topics that should be included into my master thesis and provided me with information that helped me construct my report. I will support Spyros during this period in order to publish both a review article and a research article about 3D printed microreactors. I am glad to be able to contribute to Spyros his PhD research after he mentored me for a very instructive period. Special thanks also go out to my first supervisor Dr. G.J.W (Gert-Jan) Euverink. He supervised me with full involvement and helped me a lot, especially in defining and recalling the purpose of performing research. He helped me a lot in understanding more about microbial research, and bacterial growth. I am grateful for their understanding of my background and thankful for their accessibility and open minded supervision. Lastly, I would also like to thank my second supervisor A. (Antonis) Vakis for providing me with a contact that has more knowledge on the topic of bacterial adhesion.

Abstract

At the moment bioreactor processes are time consuming and costly. A new approach that has been looked over for a long period of time is to develop a micro bioreactors system which spreads the risk of contamination, reduce cost and results in higher experimental throughput. Upcoming manufacturing technologies have given new insights to design and fabricate miniature bioreactors in the field of microbiology. The new approach makes use of 3d printing to construct devices from 3D CAD designs. In this research photopolymer 3D printing is used to fabricate a bioreactor flask. The growth rates of *Escherichia coli* (E.coli) in 3D printed shaking flasks are compared to glass shaking flasks in a laboratory environment to determine if 3d printed material is biocompatible. The results show promising bacterial growth rates for *E.coli* in a 3D printed shaking reactor. Furthermore long term factors influencing the bacterial growth, such as bacterial adhesion have also been examined, however due to a limited time the bacterial adhesion experiment is only designed and no results are available yet. The designed experimental setup examines the bacterial adhesive probability of general and coated 3D printed material slides in comparison to glass slides.

Table of contents

Preface ii

Abstract iv

1 Introduction 1

2 Research Context 2
- 2.1 Introduction . . . 2
- 2.2 Problem description . . . 2
- 2.3 Research goal . . . 3
- 2.4 Research questions . . . 3
- 2.5 Plan of action . . . 3
- 2.6 Research methodology . . . 4

3 Bioreactors 6
- 3.1 Introduction . . . 6
  - 3.1.1 Batch reactors . . . 6
  - 3.1.2 Continuous stirred tank bioreactors . . . 7
- 3.2 The bioreactor system . . . 7
- 3.3 Bioreactor performance . . . 8

4 Miniature bioreactor fabrication 9
- 4.1 Introduction . . . 9
- 4.2 Miniaturization . . . 9
- 4.3 Fabrication materials for miniature bioreactors . . . 12
- 4.4 3D Printing . . . 12
- 4.5 Biocompatibility . . . 14

5 Conceptual analysis **16**
5.1 Conceptual model 17

6 Bacterial growth **18**
6.1 Introduction 18
6.2 Bacterial growth curve 19
6.3 Factors influencing bacterial growth 21
6.3.1 Temperature and bacterial growth 21
6.3.2 pH and bacterial growth 23
6.3.3 Osmotic pressure and bacterial growth 24
6.3.4 Oxygen and bacterial growth 25
6.4 Mixing 25
6.4.1 Mixing intensity 25
6.4.2 Organic loading rate 26
6.4.3 Hydraulic retention time 26

7 Biofilms **27**
7.1 Introduction 27
7.2 Biofilm formation steps 28
7.3 Environmental factors 29
7.3.1 Effect of pH 29
7.3.2 Rheological and adhesive properties of biofilms 29
7.3.3 Effect of temperature 30

8 Microbial adhesion **31**
8.1 Introduction 31
8.2 Bacterial adhesion and bacterial growth 31
8.3 Theoretical models 31
8.3.1 DLVO theory 31
8.3.2 Thermodynamic theory 33
8.3.3 Extended DLVO theory 33
8.4 Physicochemical Properties 34
8.4.1 Surface Charge 34
8.4.2 Hydrophobicity 34
8.4.3 Surface roughness 35
8.4.4 Surface topographical configuration 35
8.4.5 Bacterial characteristics 35

8.5 Techniques used to observe and measure bacterial adhesion 36

9 Control of bacterial adhesion 38
9.1 Introduction 38
9.2 Antibacterial agent release coatings 38
9.3 Contact killing coatings 40
9.3.1 Types of antibacterial agents 41
9.3.2 Bacterial elimination mechanism 41
9.4 Anti-adhesion/ bacteria repelling coatings 42
9.4.1 Multifunctional coatings 43

10 Experiment: Bacterial growth 45
10.1 Introduction 45
10.2 Materials/ methods 46
10.3 Results 48
10.4 Discussion/ Conclusion 50

11 Experiment: Bacterial adhesion 52
11.1 Introduction 52
11.2 Materials/ methods 53
11.3 Experimental design 55

12 Conclusion 57

References 59

13 Appendix 71
13.1 Preparation steps 71
13.2 Bacterial growth Data 72
13.3 Technical drawings 73

Chapter 1

Introduction

Bioreactors are used for a variety of different goals in biotechnology. From laboratory research to large scale industrial reactors for the production of e.g., antibiotics (penicillin), proteins (amylase), or biomass (yeast). The size of the reactors range from 0.1- 10l in a laboratory environment and from 10 - 100,000l at industrial scale.

Bioreactors are used to grow microorganism in a liquid media containing the chemical components necessary for growth. During the consumption of these components the environment the microorganism lives in will change, which influence the process in a negative way. Proper process conditions and control of different parameters like temperature, pH, oxygen concentration, viscosity, mixing can minimize these negative effects. To determine the optimal reaction conditions a lot of bioreactor research has to be performed. The commercially available bioreactors are reasonable large and expensive and only a few of them can be operated in the laboratory. To fully optimize a biotechnological process in a bioreactor a lot of conditions need to be tested. Preferably this is done in a high throughput manner. With traditional bioreactors this requires a lot of lab space, a lot of personnel and a lot of money. Another more efficient possibility is to downscale the reactors to approximately 10 ml volume and build them using cost effective materials.

Recently, new manufacturing technologies have become available to design and fabricate a variety of devices. Additive manufacturing or 3D printing is an advanced technology to construct devices from 3D-designs. 3D printed objects can be made from different kind of materials like polylactic acid (PLA) or amino butadiene styrene (ABS). However, the objects are constructed using a filament that is layer by layer constructed until the object is finished. The layer are not perfectly attached to each other and e.g. a container is not watertight. Another 3D printing technology uses photopolymers. These 3D printers use a laser to polymerize a certain part of the liquid into solid material. In this research I want to design small bioreactors using the photopolymer as a construction material

Chapter 2

Research Context

2.1 Introduction

This chapter gives an explanation of the research context in which this research is performed. The Problem description, research goal and research questions will be given. At the end of the chapter a plan of action describes how each research question will be obtained.

2.2 Problem description

A continuous micro bioreactor system consists out of multiple parts in order to perform ideally. The micro bioreactor vessel is one of those parts. When scaling down the bioreactor, three main aspects have to be taken into account. These aspects are: maintaining the process sterility, maintain perfect mixing, several control systems for multiple parameters. These three aspects have to all be reevaluated when designing a continuous micro bioreactor. Currently large expensive bioreactors are used. If those bioreactors could be replaced by cheaper smaller bioreactors, while still maintaining the same performance that would be ideal. At the moment glass is mainly used as a material for bioreactors. However the disadvantage of glass is that it is not really flexible, especially not if the aim is to scale down the system to a micro level. On the other hand glass is inert, heat stable and biocompatible, which are important material characteristics for bioreactors.

2.3 Research goal

This problem description leads to the following main research objective:

To create a “cheap” continuous micro bioreactor that can replace the current “expensive” larger bioreactor and still maintain at least 90% of the performance compared to the old bioreactor.

2.4 Research questions

The analysis above leads to the following main research questions:
1. How can the performance of the bioreactor be expressed?
2. What factors have an influence on the performance of the bioreactor vessel and which of these factors can be adjusted?
3. How can the factors be converted to measurable parameters?
4. How is the growth performance and bacterial yield of the 3D printed material compared to the glass material?
5. How does bacterial adhesion influence the performance of the bioreactor vessel?
6. What characteristics influence the bacterial adhesion and how can these be converted towards measurable parameters?
7. What techniques can be used to measure the bacterial adhesion?
8. How is the bacterial adhesion of the 3D printed material compared to the glass material?

The first three, 5th, 6th and 7th Research questions are answered by doing a literature study. The result of the literature study shows which components are involved in the performance of the bioreactor vessel. The overview of these components are shown in a conceptual model. With research questions 4 and 8 the goal is to understand what the relations are between the different parameters and how these parameters can be optimized in order to optimize the performance. This research question cannot be answered theoretically. Instead this should be approached practically, by doing lab experiments.

2.5 Plan of action

The first step is to find an alternative for the current used material, which is glass. Glass is not that flexible that it can be easily scaled. 3D printed material could an alternative for fabricating small scale bioreactor vessels. For this research the material used for the bioreactor

vessel will be material used for 3D printing and is called Clear resin (RS-F2-GPCL-04). The exact components for the material are known, however not the ratio of each component. This material is obtained from the distributors of the 3D printer, which is Formlabs.

The second step is to construct the part needed for the micro bioreactor. Preferably these are as few parts as possible, because more parts make the micro bioreactor less convenient to work with. The parts are designed using a 3d product designing program. For this project the program 360 fusion is used. The 3d sketches can be made roughly in 1 day depending on the complexity. Also small adjustments in measurements of the micro bioreactor can be performed in a time frame of a single day. After the product design is finished it can be saved as a stl file. This STL file is processed further in commands so that it can be read by the 3D printer. In this program several parameters for 3d printing process can be adjusted. On average the printing process takes about 6 to 8 hours depending on the complexity.

The third step is the post processing of the miniature bioreactor flask. For the first cycle this will not be taken into account. The aim for this second step is to improve the design by changing different parameters.For example: A change in the material characteristics by adding a coating to the bioreactor flask surface.

The fourth step is to perform experiments with the 3D printed flask and compare the result against the current glass flask. The main directive of this step is to see if the 3D printed material is biocompatible which is measured on the basis of the bacterial growth. Furthermore to see if the surface within the bioreactor flask remains the same quality. The experiments with the bioreactor flask are performed in a lab environment. The experiment is based on the production of simple fast growing bacteria. The estimation is that one experiment will take roughly 2 weeks. Afterwards results are collected and evaluations are done, which will be the final step. this is to compare if the obtained results meets the expectations. Furthermore adjustments are performed based on these evaluations. After adjustments are performed, experiments are performed from the beginning. This cycle is repeated multiple times until the desired results are achieved. However this research may not achieve these desired results, due to a limited time of 3 to 4 months for experiments.

2.6 Research methodology

For this research the empirical cycle is used, because the goal is gather new knowledge and add this to the knowledge base, instead of using existing knowledge for an application. The

first step of the empirical cycle is to formulate the research problem. After formulating the research problem, a literature research is performed, which should lead towards multiple characteristics that can be captured in a conceptual framework. Each factor of the conceptual model could lead towards a knowledge question. The second step is to design a plan of action of how to answer each knowledge question. In this case this is done by doing multiple lab experiments. The results of these experiments should say something about how each characteristic acts on the miniature bioreactor. The third step is to validate the results. Here the gathered data is compared to see if it matches the desired research goal. In case this is not, an evaluation is done to figure out why the results do not match the desired research goal and maybe even perform new literature research. It is expected that the research is an iterative process. Hence the empirical cycle is run through multiple times in order to reach the desired research goal.

Chapter 3

Bioreactors

3.1 Introduction

In contrary to conventional chemical reactors, bioreactors must provide a higher degree of control over process parameters and contaminations. These bioreactors are used in a complex biologically active environment, like growing bacteria. Before newly found bacteria can be used, the bacteria first needs to be screened to determine in under which environmental circumstances the bacteria will perform optimally and how the bacteria will react to the different situations they are presented to. The growth of bacteria is usually performed by influx stream of medium and air to provide the bacteria with oxygen in cases of aerobic bacterial growth.

3.1.1 Batch reactors

Batch reactor is a non-flow vessel in which a liquid phase is stirred. Currently, a majority of bioreactions are performed in batch-wise mode. Nevertheless, batch-wise processes are discontinuous which is disadvantageous in the light of process control costs and labor time where an idle time for processes such as cleaning, sterilizing, emptying and heating occurs [1]. An important aspect of a batch reactor is that it is a closed system, which means there no material added to the reactor (influx) and also no material removed from the system (efflux). Furthermore, within the batch bioreactor, there is a constant density, which means that neither volume nor mass is changed over time. This can only be achieved if it assumed that perfect mixing occurs in the reactor tank. In other words, there are no gradients of concentration and temperature. Despite the aforementioned features, batch reactors are faster and cheaper on a short-term than continuous ones [2]. This makes batch reactors useful for testing new processes. Moreover, batch reactors can be used for sequential mode so that

multiple products are produced. An alternative type of batch system is the fed-batch reactor where the bacteria in case of bioprocess get over time nutrients (feedstock) resulting in an increased volume. The addition of nutrients is performed until a reactor reaches maximum volume.When the maximum volume is reached the reactor is turned off and emptied.

3.1.2 Continuous stirred tank bioreactors

The alternative type of reaction system is the continuous reactor. It is a flow reactor where a flow coming into the bioreactor (influx) and also a flow going out of the bioreactor (efflux). It is important that the volume of the influx is equal to the efflux to prevent the bioreactor from overflowing or starvation phenomena Continuous Stirred Tank Reactor (CSTR) is a common reactor system designed to be perfectly mixed. This implies that the temperature, concentration, and reaction rate are spatially equal in the bioreactor and in the efflux. Hence the continuous bioreactors are at steady state. In continuous mode, the molecules do not spend the same time within the bioreactor which will affect the product distribution. Furthermore, CSTRs are used in intense agitation reactions to maintain the uniform temperature in the bioreactor and homogeneous mixture [3]. An additional aspect of the CSTRs is that process can be optimized in comparison to their batch bioreactor counterpart, due to the fact that the process is continuously controlled [2].

3.2 The bioreactor system

Bioreactors can also be used for the production of products, like bacteria, proteins, antibiotics, flavors etc. For these kinds of processes batch reactors are used. The problem is that these batch wise operated bioreactors take a long time to obtain large output of product in comparison to continuous operated bioreactors which have small continuous output of product. On the other hand continuous operated bioreactors have more risk involved, because the impact of failure is higher. However if there is a way to reduce the impact of failure in these types of bioreactors then this can replace the batch-wise operated bioreactor. Lowering the impact of failure can be achieved by spreading the risk. This implies a system of many continuous bioreactors operating independently. Hence, if a bioreactor gets contaminated it can be shut down and all other bioreactors are still remaining there process.

3.3 Bioreactor performance

Similar to chemical research in biochemical research the term reactor performance is often used. During a quick scan in the literature it appears that bioreactor performance is a rather known concept, however never fully explained [4, 5]. In practice, the performance of a biochemical conversion process, i.e. the bioreactor performance, is essentially determined by the benefit/cost ratio [6]. For optimization purposes the criteria for a high volume/ low value added product are usually different from criteria used for low volume/high value added product. In the main case products belong to the first category. In this case the benefit of the bioreactor is either defined as the yield of the desired product on substrate (g product per g substrate), the productivity (g product per L reactor volume per hour) or the final titer (g product per L reactor volume) [7]. This benefit is also usually connected to a certain market price. On the other hand there are also costs involved in biochemical conversion processes. The reduction of costs is often the main objective of biochemical engineering [6].

The bioreactor tank is the core part of the bioreactor system. Within the bioreactor tank the solution is mixed to maintain a homogeneous solution, which effects the optimal performance. Different mixing methods [8][9] are used to obtain the perfect mixing by looking at the fluid flow, mixing rate and mixing time as parameters. Furthermore the cultivation process needs to be carefully controlled. Sensors for pH, temperature, oxygen concentration are environmental factors that influence the bacterial growth.

Chapter 4

Miniature bioreactor fabrication

4.1 Introduction

Miniature bioreactor fabrication shows great promise in the field of microbiology with the uprising 3D printers and biocompatible 3D printed materials. This chapter will the advantages of miniaturization for bacterial growth and developments of miniature bioreactors used for experiments. Furthermore this chapter will the describe the 3D printing techniques and 3D printing materials.

4.2 Miniaturization

According to Latterman et al.[10] the design of a microbioreactor typically varies in shape, material properties and instrumentation, which have a direct influence on the bioreactor performance. The downscaling of bioreactors is a current trend and promising solution for optimization studies in biotechnology (e.g., fermentation, anaerobic digestion) [11, 12]. Miniaturization aims at replacing pilot-scale bioreactors and ultimately bench-scale bioreactors [13]. Unfortunately, the current lab-scale systems (e.g., shaken flask systems) lack automated feeding, pH and/or oxygen control, a fact that is unfavorable for the environment wherein microbial communities grow [14, 15]. Thus, parallel running mini-bioreactors have become a more attractive method as they provide early-stage process understanding during process development [16]. Mini-bioreactors have the capability to mimic conditions that microbial communities experience in larger vessels [17, 18]. Figure 1 depicts important aspects have to be considered for the optimal bioreactor design. Reliability, cost efficiency, and process performance are the outmost important aspects for optimization, following by the after sustainable reengineering (reactor and process redesign) and product innovation sections.

These sections should expand the current knowledge base by performing experiments after which commercialization is assessed by a feasibility study.

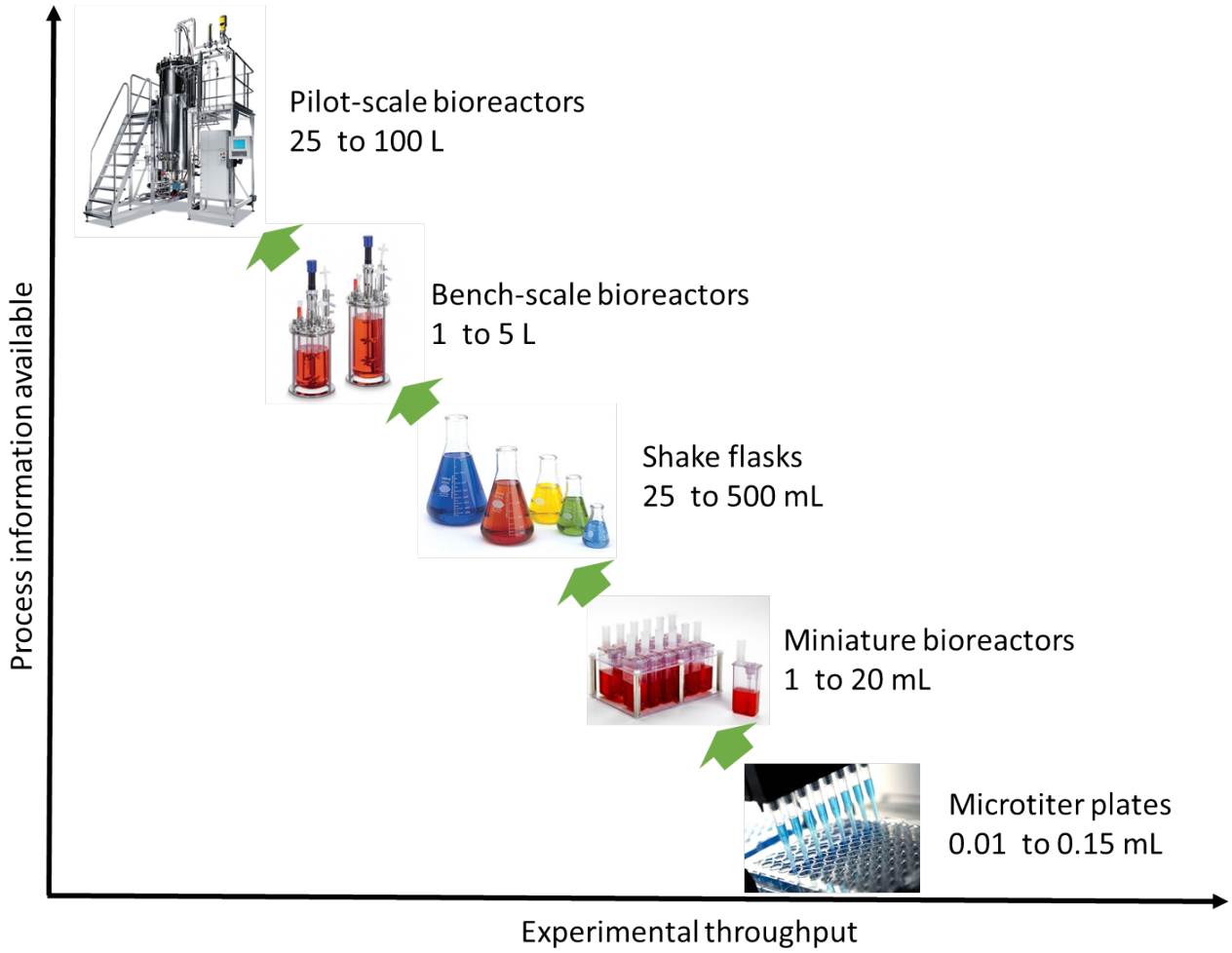

Fig. 4.1 From small lab scale to large scale bioreactors.

The image depict above figure 4.1 shows what the influence is on scaling bioreactors. For larger bioreactors the advantage is to accurately monitor the bioreactor solution. Sensors for temperature, pH etc. are more easily accessible. By scaling down the bioreactor the process information seems to be more difficult to obtain, however the small size contributes towards a bioreactor system in which multiple bioreactors can be screened for bacterial growth experiments. Thus resulting in more experimental throughput.

Table 4.1 Factorized miniature bioreactor systems and their main characteristics

Reactortype (volume)	Application	Material	Mixing	sensoring	ref.
μBR (150μ)	Microbial fermentation	PMMA, PDMS	magnetic	pH, DO	[19]
μBR (100μ)	Microbial fermentation (E.coli)	PDMS	peristalic oxygenating mixer	pH, DO,	[20]
μBR (8x 250μ)	Cell cultivation (E.coli)	Plastic	unknown	pH, DO, dCO_2	[21]
Mililiter scale tank BR (10ml)	Mycelium forming	PEEK	Magnetic	pH, DO	[22]
Mililiter scale BR (12ml)	Measuring power consumption/ energy dissipation		Magnetic	Torque, particle size	[23]
$SimCell^{TM}$ (1ml)	Cell cultivation		Sparging	pH, DO	[24]
MBA (0,1-2,0ml	controlling cellular microenvironments	PDMS	Unknown	flow velocity	[25],[26]
$ambr^{TM}$ (15ml)	Cell cultivation		Sparging	pH, DO	[27]
$ambr^{TM}$ (15ml)	Cell cultivation		Sparging	pH, DO	[28]
Mini-Bioreactor (30ml)	Mammalian cell culturing		Angled disc impeller	Temperature	[29]
bioREACTOR48 (8-15ml)	parallel fermentation (E.coli)	Polystyrene	auto induction impeller	pH, DO, stirrer speed	[30]

4.3 Fabrication materials for miniature bioreactors

Materials employed may influence the applicability of a bioreactor system. The thermal properties of the material e.g. thermal conductivity, thermal expansion as well as the melting point, are important when the reactor vessel is exposed to high temperatures. Chemical properties such as chemicals resistance, is also crucial for the operation procedure. As for last, the physical properties of surfaces affect the reactor vessel performance as they are related to bacterial adherence and biofilm formation [31].

4.4 3D Printing

The prospect of fabricating objects with the use of 3D printing has seen improved interest in recent years [32]. In spite the fact that the range of commercial products is still limited, 3D printing has potential when taking into account design and fabrication. The potential from 3D printers explicate the interest of multiple research fields on 3D printing applicability. To date, 3D printing is mainly used for medical applications, but it has attracted the interest of biotechnology-based researchers [33, 34]. 3D printing is an additive manufacturing technique, which means that the object is fabricated layer-by-layer rather than through molding or subtractive techniques. The variety of materials used in 3D printing (e.g., plastic, stainless steel, ceramics, glass, paper, photopolymers, and even living cells) ensures opportunities for multiple applications [35–40]. These materials are in the form of powders, filament, liquids, and sheets as a starting product. Furthermore, there are multiple techniques used in the 3D printing and their advantages and drawbacks are outlined in Figure 4.3.

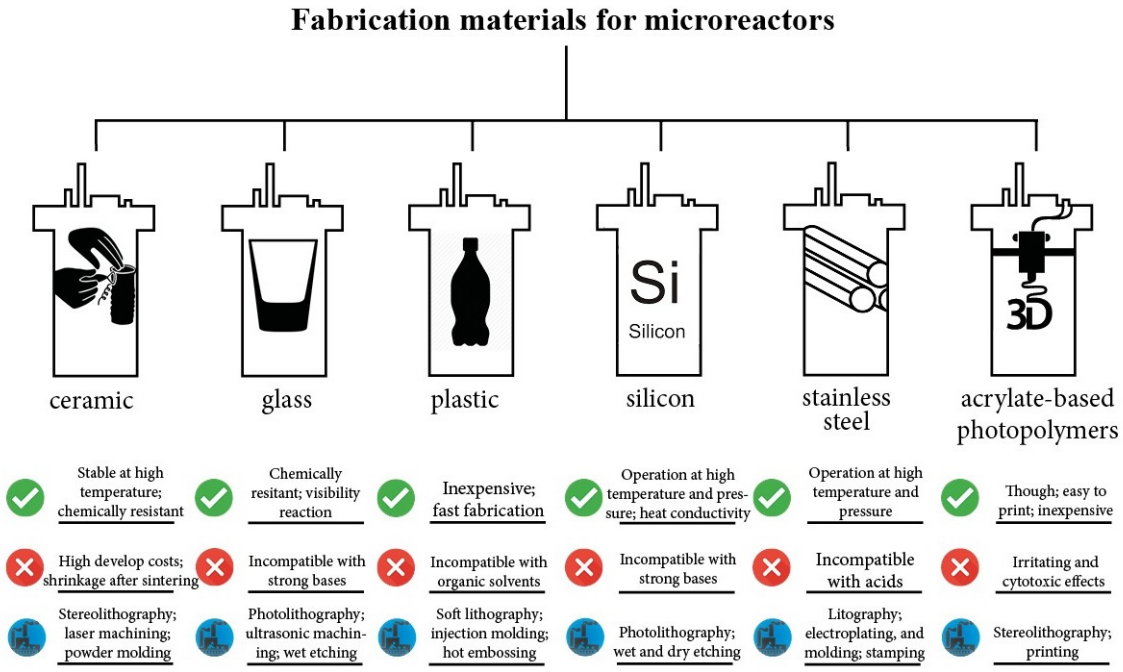

Fig. 4.2 Fabrication and highlighted features for various microreactor materials[36, 37, 41–48].

Besides the pros and cons, 3D printing, in general, has some great advantages over other conventional constructional methods. The process of designing and fabricating an object overtakes some traditional manufacturing steps including procurement of individual parts, creation of parts using molds, machining to carve parts from blocks of material, welding metal parts together, and assembly [32]. Another main advantage of 3D printing is the efficiency in which it uses its material. In other words, 3D printing can not only fabricate internally complex objects that are difficult or impossible to produce by traditional manufacturing techniques, but it can also produce these objects with less wasted materials [32].On the other hand, 3D printing has some serious limitations, which have been improved in the last couple of years. These limitations consist of the relatively slow building speed, limited object size and detail (resolution), high materials cost, and in some cases, limited object strength (depending on which 3D printing technique) [32].

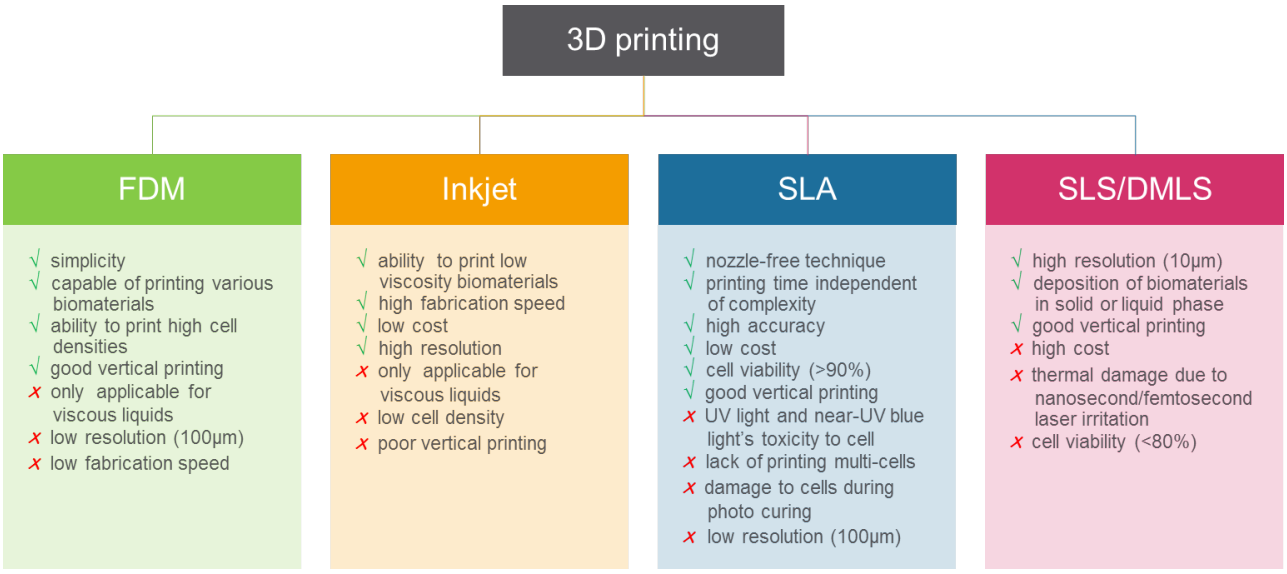

Fig. 4.3 Advantages and limitations of 3D printing techniques. These techniques fabricate an object one layer at a time and include fused deposition modeling (FDM), inkjet bioprinting, stereolithography (SLA), laser sintering (SLS), and direct metal laser sintering (DMLS) [49–55].

This research makes use of a Formlabs 2.0 3D printer, which uses stereolithography as a 3D printing technique. This 3D printer can make use of different types of polymer resins with different material properties, which can be bought from the Formlabs company. The Clear resin is used for further experimentation of bacterial growth. In stereolithography a laser or other UV light source is aimed onto the surface of a pool of photopolymer (light-sensitive resin). The laser draws a single layer on the liquid surface; the build platform then moves down, and more fluid is released to draw the next layer.

4.5 Biocompatibility

Biocompatibility, a term that currently is almost exclusively used in tissue engineering. The first description of biocompatibility was given by Williams et al. Biocompatibility is the ability of a material to perform with an appropriate host response in a specific application"[56]. Biocompatibility refers to the ability of a biomaterial to perform its desired function with respect to a medical therapy, without eliciting any undesirable local or systemic effects in the recipient or beneficiary of that therapy, but generating the most appropriate beneficial cellular or tissue response in that specific situation, and optimizing the clinically relevant performance of that therapy[57]. Black et al. replaced the definition of biocompatibility with biological performance and separated biological performance into an host response and a

material response[58]. All these descriptions imply that biocompatibility is not a material property, but more used it the sense of the functionality for a specific application[59]. This means that biocompatibility is not always the same for the same type of material, it depends in which situation the biomaterial is used. However the defintion of biocompatibility is still often related to a biomaterial-host system. Which implies that the human body is included in that system. But should the term biocompatibilty not be rephrased for other research branches that also make use of biomaterials and also want the biomaterial to perform a function for a specific application.

In the microbial research upcoming 3D printing techniques show opportunities for biomaterials to fabricate miniature bioreactors. Interactions between microbes and biomaterial influence the functionality of the bioreactors in terms of microbial growth. For the majority this description can be related to the definition of biocompatibility. Instead of having a local host in the system, the system contains an inoculum or medium in which the microbes interact with the material substrate surface. Now the question remains, is the general definition of biocompatibility limited to the medical point of view and should the definition be overhauled or rephrased, or should another term be used to describe the interactions that happen in microbial research. For this particularly research biocompatibility is described by the following three requirements:
1) The material surface of the bioreactor vessel is inert.
2) The material surface of the bioreactor vessel is not biodegradable.
3) The material surface of the bioreactor vessel does not adhere bacteria.
All three requirements are important for research reproducibility and research integrity and these requirements should be accurately tested and at all times kept in mind when doing microbial experiments.

Chapter 5

Conceptual analysis

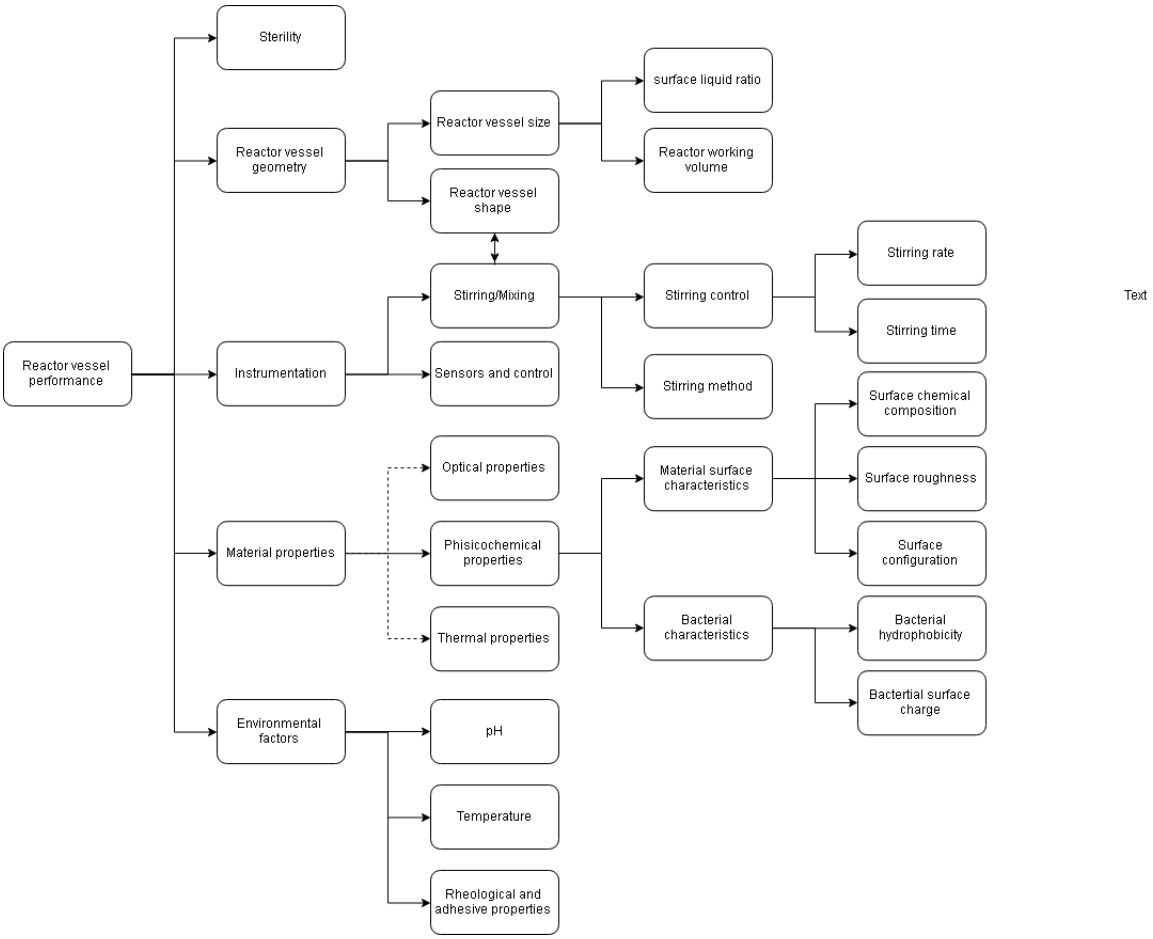

Fig. 5.1 Conceptual model of the bioreactor vessel system, showing all factors and relations influencing the performance of the bioreactor vessel.

5.1 Conceptual model

The conceptual model in figure 5.1 shows the factors that influence the bioreactors vessel performance. For this specific research the focus is mainly on the material properties. As mentioned before the optical properties will be looked at as a process convenience factor. For the thermal properties applies the same, however an experiment will be done to see if the 3D printing material can autoclaved. The main focus of this research is based around the physicochemical properties, due to the effect these properties have on bacterial adhesion and biofilm formation. The rest of the factors will also taken into account, mainly to remain process stability and consistency.

Chapter 6

Bacterial growth

6.1 Introduction

The growth of a bacterium is defined as the increase in cells number rather than cell size. There are certain requirements for bacterial growth and factors that influence the growth process. The main factors influencing bacterial growth are temperature, pH, osmotic pressure, mixing, and oxygen concentration. Besides these factors, there are also nutritional requirements. The replication process is not through mitoses and meiosis but through a process known as binary fission. The DNA of a singular bacterium will be replicated during binary fission (Figure 6.1). Afterwards, the DNA will be divided and a transverse septum will be formed by the cell wall and the membrane. The transverse septum will be completely formed which will enable cells separation, thus, generating new bacterial cells. One pivotal parameter in bacterial growth is the time interval required for the cell division, which is known as generation time. The generation time can vary depending on the type of organism and the environmental conditions. In the laboratory, the bacterium is isolated and placed into a medium such as a petri dish.

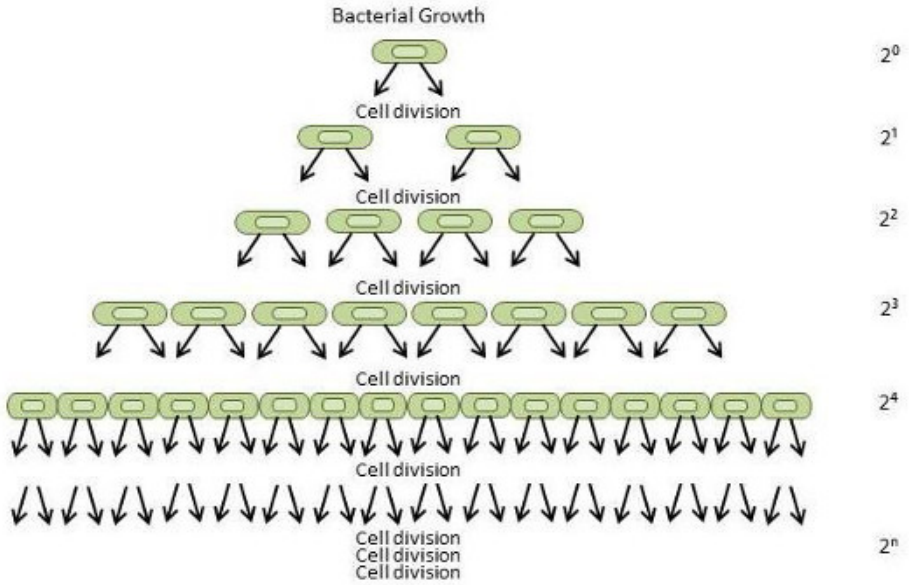

Fig. 6.1 This image displays process of binary fission. The parental cell divides into two daughter cells, which will then again divide into two cells. At first the increasing cell number is low and after a while the number will increase immensely. [60]

6.2 Bacterial growth curve

The bacterial growth consists of four growth phases: lag phase, log phase, stationary phase, and decline phase and they are depicted in Figure 6.2. In the first phase, so-called lag phase, the bacteria have to adapt physiologically to the culture conditions and growth begins after a period of time. This may involve a time requirement for the induction of specific messenger RNA (mRNA) and protein synthesis to meet new culture requirements. Another important factor is the density in which the cells are distributed. Broadly, exoenzymes and nutrients are shared in close proximity; however, if the density is low this could lead to a dilution of these materials [60]. The latter results in slow cell growth and transition to the log phase. Depending on the conditions, the lag phase may take only minutes or several hours. The time length of the lag phase depends on the type of medium.

The lag phase is followed by the log or else exponential phase. In this phase, the cells are in optimum growth state and perform binary fission. During the log phase, there is a logarithmic increase in cell number. The gradient of this line is also known as bacterial growth. The mathematical description of the bacterial growth in the log phase can be described using the following equation:

$$\frac{\delta N}{\delta t} = \mu N \tag{6.1}$$

where N is defined as the cell number, t as the time and μ as the specific growth rate constant (1/time).

This leads to the following expression for the number of present cells exponential growth), which is given by:

$$N = N_0 e^{\mu t} \tag{6.2}$$

where N_0 is the number of cells at t=0.

The third phase is called the stationary phase. In this phase the bacterial growth slows down until it reaches maximum growth and the logarithmic cell number remains stationary. The mathematical expression of the stationary phase is expressed as:

$$\frac{\delta N}{\delta t} = 0 \tag{6.3}$$

In the stationary phase there is a balance between cell division and there is no actual bacterial growth. This is caused by the depletion of critical nutrients or the accumulation of waste product. Some of the cells can lyse nutrients from dead cells, which is called endogenous metabolism. This process occurs throughout the whole growth cycle but in high degree occurs in the stationary phase. The last phase is called the death or else decline phase and accumulation of waste products or exposure to oxygen occurs. The death phase can be mathematically expressed as:

$$\frac{\delta N}{\delta t} = -k_d N \tag{6.4}$$

where k_d is the specific death rate.

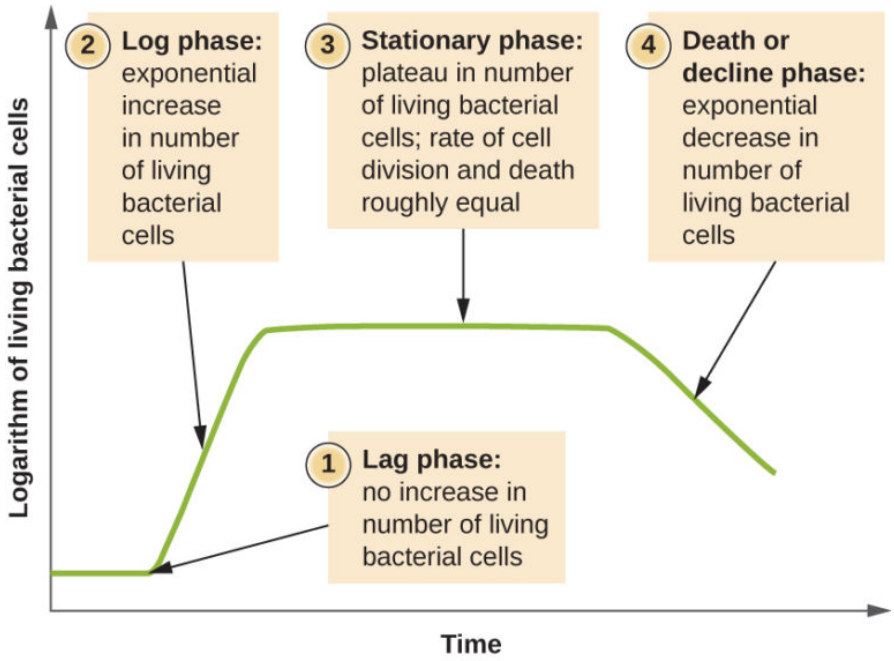

Fig. 6.2 This graph shows the relation between time and the growth of bacteria in a laboratory environment. The x-axis represents the time (t) and the y-axis the bacterial growth rate. The graph is divided into four phases which together represent the bacterial growth curve. The four phases are the lag, log, stationary and decline phase [61]. On the X-axis indicates time(t) and the y-axis is the logarithm of the relative population size (Ln(N/N0)).

6.3 Factors influencing bacterial growth

The growth of the bacteria have to be under laboratory condition in order to achieve optimal growth. There are certain requirements for better bacterial growth and factors that influence the growth process. The main factors influencing bacterial growth are temperature, pH, osmotic pressure and oxygen concentration. Besides these factors there are also nutritional requirements. Also mixing is an important factor which can influence the bacterial growth and will be further explained in section 6.4.

6.3.1 Temperature and bacterial growth

As mentioned before the optimal values regarding these factors differs allot depending on which type of bacteria. The graph "Fig:5.3" shows the relation between growth rate and temperature depending on certain types of bacteria.

Organism called psychrophiles are known to prefer cooler environments, also known as "cool loving". The temperature for this type ranges between the -4°C and 25°C and optimum

growth occurs at 10°C. These bacteria are found in natural environments and are responsible for the spoilage of refrigerated food. The next organism is called a mesophile (20°C-45°C). With optimal temperatures around 35°C, which is around the same temperature of the human body (37°C). The third organism is called a thermophile (50°C-80°C). These bacteria prefer hotter environments, also known as "heat loving". Thermophiles are widely distributed in hot springs, geothermal soils, and man made environments such as garden compost piles where the microbes break down kitchen scraps and vegetal material. In an even hotter environment there are organisms called hyperthermophiles (80°C-110°C)[61].

The majority of bioreactors operate at mesophilic or thermophilic temperatures. Reaction rate and load bearing capacity at thermophilic temperatures are higher compared to AD under mesophilic conditions[62]. This results in higher productivity of microorganisms, however thermophilic processes are harder to control and require more energy to remain at a constant temperature[63]. Chea et al. studied the effect of temperature on the anaerobic digestion of biomass from swine manure. He noticed that even small differences in temperature at mesophilic conditions (25°C-35°C) resulted in 13%-17% more yield for higher temperatures compared to 10°C lower temperatures[64]. Another study done by Ward et al. investigated the methane yield for mesophilic and thermophilic temperature rates. He found out that the retention time under thermophilic conditions are shorter compared to mesophilic conditions. According to his data 95% of the methane yield was obtained after 11 days and 27 days for thermophilic and mesophilic temperature conditions respectively[65].

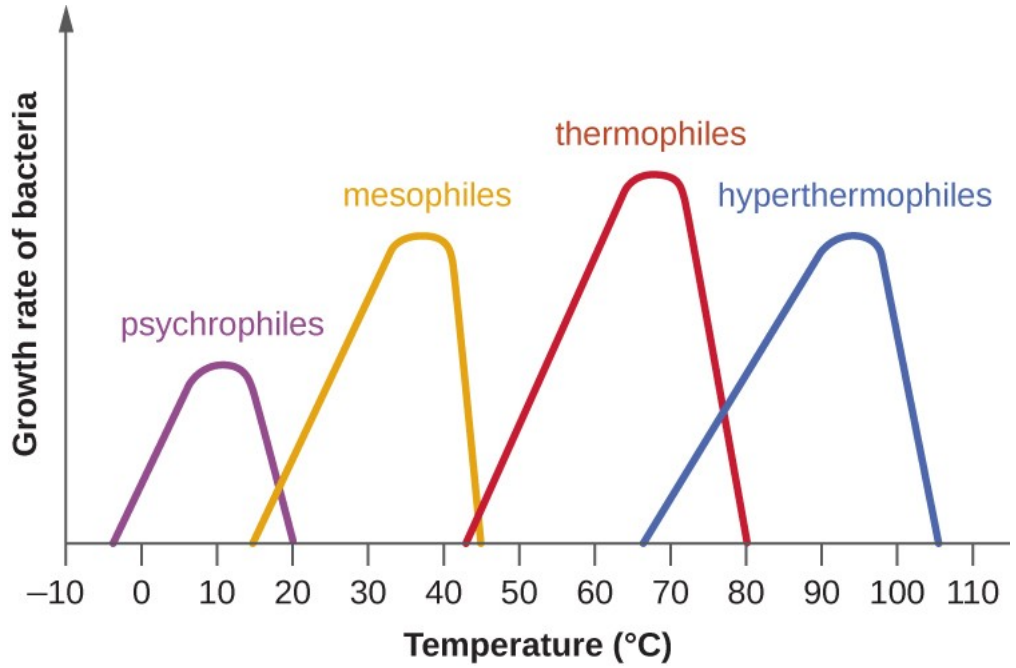

Fig. 6.3 The graph shows relation between temperature and growth: The x axis represents the temperature ranging from -10°C till 105°C and the y axis represent the bacterial growth rate. The four types represented are psychro, meso, thermo and superthermophiles.[61]

6.3.2 pH and bacterial growth

If the pH reaches values below 7 it is considered acidic and above it is considered basic. Extreme pH affects the structure of all macromolecules[61]. Extreme pH values either effect the hydrogen bonds holding strands of DNA together, effects lipids or effects the protein. However the optimal growth pH depends on the type of bacteria. The graph "fig:5.4" shows the bacterial growth rate as a function of the pH.

Bacteria that grow best in acidic environments are known as the acidophiles (0pH-6pH), which are "acidic loving". Through increased negative surface charge shown by the protein to stabilize at low pH values. This is only an example of how the acidophiles adapt and survive to strong acidic environments. The majority of the bacteria are called the neutralphiles (6pH-9pH), which only survive in a neutral pH environment. Bacteria surviving at high pH value are called the alkaliphiles (>10pH). Extreme alkaliphiles have adapted to their harsh environment through evolutionary modification of lipid and protein structure and compensatory mechanisms to maintain the proton motive force in an alkaline environment[61].

Furthermore different bioreaction processes use different optimal pH values. In general the optimal pH values for methanogenesis range between the 6.8pH-7.2pH[63]. According

to Mosey et al. pH values below 6.6 show significant reduction in growth rates[66]. However for hydrolysis and acidogenesis processes the optimal pH values range between the 5.5pH-6.5pH[67]. Therefore some designers prefer a two stage configuration where they separate methanogenesis/acetogenesis from hydrolysis/acidogenesis processes[65]. Moreover Latif et al. investigated low pH AD in waste activated sludge. He concluded that the lowering the pH resulted in lower CH_4 yields and the bacterial community is influenced by the lower pH, however not the acetoclastic methanogens[68]. Zhang et al. has done AD experiments on swine manure an maize stalk with different pH values (6.0, 6.5, 7.0, 7.5 and 8.0) and he experienced that the pH values between 6.5-7.5 are best used for the optimal biogas production[69].

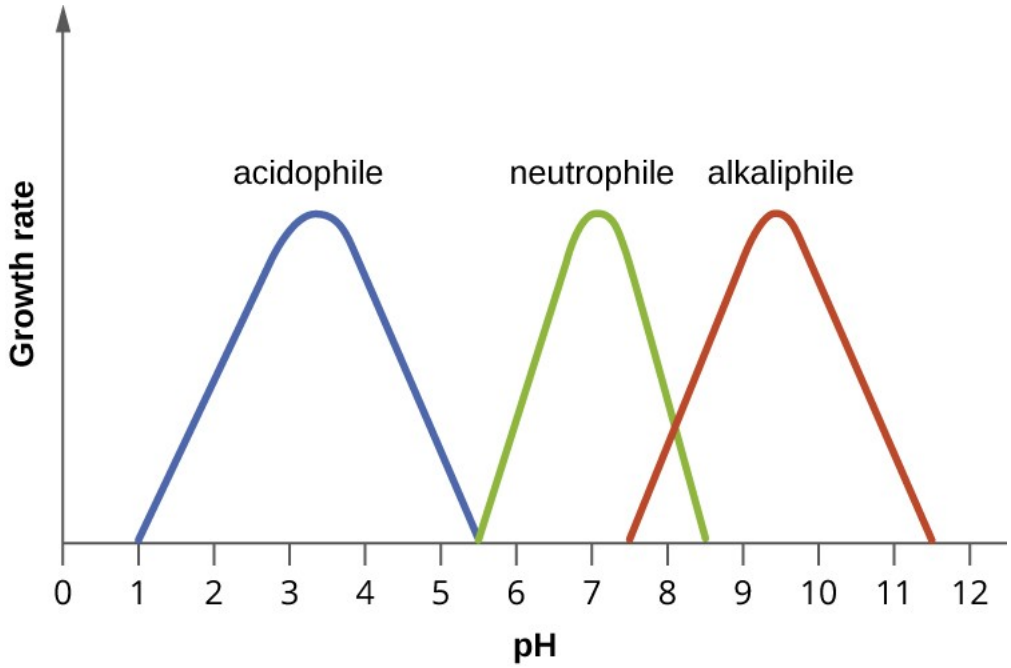

Fig. 6.4 This graph shows the relation between pH and growth. The x-axis represents the pH ranging from 0pH till 10.5pH and the y-axis representing the bacterial growth rate. The three types represented are acido, neutro and akiliphiles

6.3.3 Osmotic pressure and bacterial growth

The cytoplasm of most organisms has in general higher solute concentrations then most natural enivironments. Rigid cell walls protect the cells from bursting in a dilute environment. Not much protection is available against high osmotic pressure. In this case, water, following its concentration gradient, flows out of the cell. This results in plasmolysis (the shrinking of the protoplasm away from the intact cell wall) and cell death. Microorganisms depend

on available water to grow. The term water activity a_w is commonly used to measure the available moisture. water activity is the ratio of the vapor pressure of the medium of interest to the vapor pressure of pure distilled water; therefore, the a_w of water is equal to 1.0. Bacteria require high a_w (0.97–0.99) in contrast to fungi, which can tolerate drier environments. Decreasing the water content of foods by drying, as in jerky, or through freeze-drying or by increasing osmotic pressure, as in brine and jams, are common methods of preventing spoilage[61].

6.3.4 Oxygen and bacterial growth

Bacteria can be either anaerobic or aerobic or something in between, which can be separated into four groups. The group that needs oxygen to survive are called obligate aerobes. Then there is a group that can with or without oxygen, however grow better in an environment with oxygen and these are called facultative anaerobes. The third group are called the aerotolerant anaerobes, which grow equally with or without oxygen. The fourth group are bacteria that can not survive in the presence of oxygen and are called obligated anaerobes. The fifth group are called microaerophiles which only grow in specificly low oxygen concentrations (2%-10%). In a study performed by Tsapekos et al. microaearation is used to increase the methane yield obtain by wheat straws by 7.2% and decreased stability at high oxygen loads[70]. Montalvo et al. also tested the influence of micro aeration effect on methane prodcution in AD. AD processes which included micro aerated pretreatment showed 200% more yield compared to the conventional anaerobic digesters[71]. The final group of bacteria are called capnophiles, which grow in the presence of CO_2[61].

6.4 Mixing

Multiple studies have investigated the effect of mixing on growth rates. In general three important control parameters are used to understand the influence of mixing[72–76]. These parameters are the mixing intensity(rpm), organic loading rate (OLR) and hydraulic retention time (HRT). These parameters will be explained more briefly and how these influence the anaerobic digestion and biogas production. Because anaerobic digestion and biogas production have higher yields with better bacterial growth.

6.4.1 Mixing intensity

The mixing intensity is the rotation rate at which the mixing is performed. In general a high mixing intensity is not preferred. At high mixing intensities reduces floculation and results

in lower yields in anaerobic digestion processes. The higher fluid shear stress rates break the floculation formations. Lindmark et al. experimented with different rotation rates (150rpm, 25rpm and minimal intermittently). His study showed that the production of biogas is highest at a lower mixing intensity[77]. Kariyama et al. confirms these findings and concluded that high mixing intensities should be avoided[75]. Furthermore excessive mixing intensity can increase the startup time due to process instabilities where the microorganisms need time to adept to the environmental change and can overall lead to an unstable process[72].

6.4.2 Organic loading rate

The OLR is a measure of the amount of substrate/feed that is added to a continuous bioreactor system per unit of volume a day. This factor is especially important for process stability. Destabilization can be caused by sudden or high loads of feed added to the bioreactor system. This factor is closely related to the optimal mixing intensity, because high OLR results in lower viscosity, which then results in an higher mixing intensity to achieve the same results[72]. According to Furguson et al. fluctuations in OLR can de used to produce stability and increase performances in AD. He also mentions that OLR can be used to control microbial community structure and dynamics[74]. Gou et al. studied the influence of OLR and temperature on waste activated sludge and food waste in co-digestion. He concluded 1) CH_4 yield decreased as OLR gradually increased. 2) A thermalphilic system has the highest endurable OLR. 3) Mesophilic system showed highest process stability with low OLR. Finally he also mentioned that according to his data temperature more of an influence is on the microbial community than the OLR[78].

6.4.3 Hydraulic retention time

The HRT is a measure of the average retention time of a liquid or dissolved component inside a reactor and is calculated as the tank volume divided by influent flow rate[72]. Studies done by Dareioti and Haryanto et al investigated the effect of HRT in biogas production. Both of the studies show that the treatments with the highest HRT (25d) show the highest biogas production rate and yield[79][80].

Chapter 7

Biofilms

7.1 Introduction

Food, dairy, maritime, water systems, oil, paper, opticians, dentistry, hospitals and domestic households. These are several examples of industries that are affected by the biofilms [81–90]. The occurrence of biofilms lead to serious problems e.g., product spoilage, reduced production efficiency, corrosion, unsightliness, infection, pipe blockages, and equipment failure [91]. A biofilm is defined as an organized aggregate of microorganisms living within an extracellular polymeric matrix that they produce. This is irreversibly attached to either a material surface or a living surface, which cannot be easily removed due to its complex structure [92]. This complex layer of extracellular polymeric substances (EPS) protects them from antibiotics, disinfectants, and dynamic environments [93, 94]. The intercellular communication within the biofilm rapidly stimulate the up and down- regulation of gene expression. This property enables temporary adaptations such as phenotypic variation and the ability to survive in nutrient deficient conditions. These pitfalls and challenges create an industrial interest for developing materials, methods, and tools that can prevent or remove the formation of biofilms.

7.2 Biofilm formation steps

The process of biofilm formation can be summarized in four steps: initial attachment, microcolony formation, maturation, and dispersion (Figure 7.1). The first step is the process where planktonic bacteria get close to the material surface. This is caused by a combination of physical forces (e.g attractive van der Waals and repulsive electrostatic forces) and chemical forces (e.g. the cohesion between microbial cells) [31]. Once the bacteria come into contact with the material surface the appendages (e.g. fimbriae, pili, and flagella) strengthen the attachment between the bacterial cell and the surface [92]. Moreover, environmental factors such as temperature and pH influence the bacterial adhesion. The hydrophobicity of the material surface also reduces certain repulsion forces on between the bacteria and material [31]. Di Ciccio et al. alluded that bacteria attach more likely to hydrophobic surfaces (polystyrene) than hydrophilic surfaces (stainless steel) [95]. It is notable that the bacterial attachment is still reversible, which makes it lucrative to look at for prevention of biofilm growth.

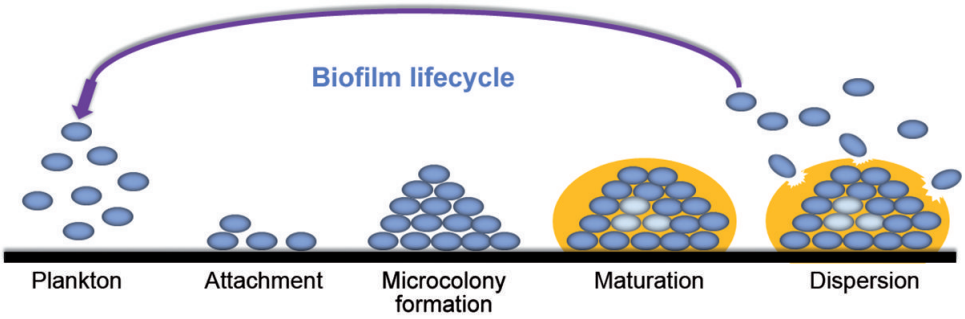

Fig. 7.1 Biofilm formation steps[96].

Following the attachment stage, the process of multiplication and division of the bacteria starts. This leads to the EPS originating as a layer protecting the bacteria and this stage is also called irreversible attachment [97]. The complex structure of multiple different microcolonies formed on the surface renders them more resistant to antibiotics and disinfectants. The amount of antibiotic that is needed to remove can range between 100-1000 times more than free swimming planktonic bacteria [93]. These micro-communities coordinate with one another in multiple aspects. This coordination plays a crucial role in the exchange of substrate, distribution of important metabolic products, and excretion of metabolic end products [31].

In this stage, certain molecules, the so-called autoinducers, are used as signaling molecules to communicate from cell to cell [98]. The autoinducers make use of a technique called quorum sensing. This communication mechanism between the microbial cells makes the EPS matrix able to adapt to multiple situations. The protection of the complex EPS architecture

gives the bacteria the freedom to grow into a mushroom-like structure [99]. Within the three dimensional structure of EPS, channels are formed between the different forming colonies. The channels function as a circulatory water system that allows nutrients to venture deep into the biofilm and prevent the bacterial growth termination [100].

In the last stage, an oversaturation of microbial cells is observed. Once the EPS temporarily removes the protective layer at the top of the mushroom-like structure, bacteria will disperse from the biofilm into the liquid phase. The sessile cells are converted into motile forms resulting in a dispersion of the microbial cells. Given the wide variety of agents and conditions attributed to a cellular release from the biofilm, one has to wonder whether the nature of the "escape" from the attached biomass is indeed the same. This is particularly important considering that there is more than one way for bacteria to leave the biofilm. In fact, there are at least three types of "escapes" or ways for bacteria to leave the biofilm: desorption, detachment, and dispersion [101].

7.3 Environmental factors

7.3.1 Effect of pH

The pH plays an important role in bacterial growth and optimal range (6.5-7.2) depends highly on the type of bacteria [102]. Disinfectants and antibiotics are used to change the preferred optimal bacterial growth by changing the pH of the solution[91]. If the pH deviates from the optimal range may impede the bacterial growth resulting on bacterial death and the formation of the biofilm stops. However, this is only the case in the first stage of biofilm formation. After the initial attachment phase, bacteria become more acidic resistant, due to the protection from the EPS matrix. While planktonic bacteria are more acidic sensitive, if the bacteria form a biofilm the bacteria become more resistant to a lower pH [103]. Furthermore, the speed at which the pH of the solution changes affects the biofilm development. According to Li et al. [104], a gradual change in the acidity increases the chance of cell survival compared to a sudden change in pH caused by adding HCl. This means that biofilms are less resistant towards large pH fluctuations compared to small pH differences. If this mechanism that lets the biofilm adapt is not fast enough due to sudden changes in their environment this could lead to cell extermination [91].

7.3.2 Rheological and adhesive properties of biofilms

Klapper at al. investigated the viscoelasticity of biofilms of Pseudomonas aeruginosa and observed dual behavior: an irreversible viscous deformation and viscoelastic response and

recoil [105]. Characterization of the biofilm internal structure requires an assessment of physical properties on the micro scale as well as any structural features that exist within it [106]. The matrix formed by EPS responds to stress by exhibiting: (1) elastic tension due to a combination of polymeric entanglement, entropic, and weak hydrogen bonding forces, (2) viscous damping due to polymeric friction and hydrogen bond breakage, and (3) alignment of the polymers in the shear direction [91]. However, a recent study by Kundukad et al. has shown that the rheological properties can be independent of the flow rate, a fact that is not documented to earlier observations [107]. They also stated that the size of the microcolonies plays an important role in the surface rheology. The reasoning behind this is that the biofilm growth occurs at the periphery rather than within the biofilm and shows that the periphery of the microcolonies is dynamic compositionally and mechanically.

7.3.3 Effect of temperature

The nutrient metabolism of bacteria is directly associated and dependent on the presence of enzymes, which means that the biofilm formation depends on the reaction rates of the enzymes. A large impact factor in the enzymatic reaction rate is the temperature and so the temperature is correlated to formation of cells forming a biofilm. [91]. Furthermore, studies have shown that at low temperatures (10°C) the bacteria have an increased surface area compared to higher temperatures (35°C) [108, 109]. Former study by Townsly and Yildiz examined the temperature influence on the biofilm formation in Vibrio cholerae [110]. They deduced that biofilms formed at low temperatures (15°C and 25°C) exhibited increased biomass and thickness and were more structured compared to those formed at 37°C. This is ascribed to the number of appendages. The number of flagella from bacteria is dependent on the temperature. At high temperatures (> 35°C) a bacteria seems to have only a single flagellum and at lower temperature the number of flagella increases and, thus, increases the surface area of the bacteria and the likelihood of bacterial adhesion in the initial attachment stage [111]. In spite the fact that the effect of temperature on the development of biofilms especially in the first stage of biofilm formation is extensively examined and reported, the effect of temperature when the biofilm is already established remain ambiguous standpoint [91]. Even higher temperatures (80°C and 90°C) seem to have little impact on the removal of biofilms and even shows that the adherent nature of the biofilm to the surface increases, which is known as baking effects [112].

Chapter 8

Microbial adhesion

8.1 Introduction

This chapter will first describe how bacterial adhesion could effect the bacterial growth. After that an the theoretical model behind phisicochemical interactions will be given. From the theoretical model the characteristics influencing bacterial adhesion can be obtained.

8.2 Bacterial adhesion and bacterial growth

One of the challenges in the field of microbial research is the bacterial adhesion. Bacterial adhesion has a negative influence on bacterial growth and mobilization. In order to grow, microorganisms require right conditions and amount of nutrients. If bacteria adhere to the material surface they obtain fewer resources, fact that subdues the bacterial growth. Addable negative effect of bacterial adhesion is the creation of biofilms layer to the material surface. The biofilm layer reinforces the adhesion phenomenon slowing the bacterial growth and leading to a deficit of the end-product. The bacterial adhesion can be expounded firstly by the physicochemical interactions between the bacteria and the surface and secondly by the molecular and cellular interactions between the bacteria and the surface.

8.3 Theoretical models

8.3.1 DLVO theory

One of the theories used to describe the interactions between bacteria and the surface is the Derjaguin-Landau-Verwey-Overbeek (DLVO) theory. This theory is widely applied to

delineate interactions between colloidal particles or a colloidal particle with a surface. As such the size of bacteria (0.5-2.0μm) corresponds to the size of a colloidal particles, this theory has been used for the interactions between bacteria and the material surface [113].

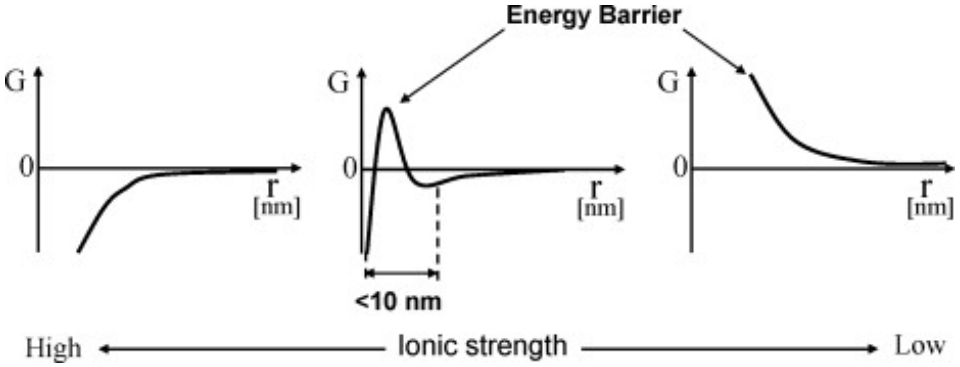

Fig. 8.1 Total interaction energy between a bacterial cell and a surface depending on ionic strength[113].

The total interactions ΔG^{adh} of bacteria with the material surface has been determined by the balance between attractive van der waals forces ΔG^{vdW} and electrostatic repulsion forces ΔG^{dl} from the overlap between the electrical double layer of the cell and the substratum. The classical DLVO is expressed as:

$$\Delta G^{adh}(d) = \Delta G^{vdW}(d) + \Delta G^{dl}(d) \tag{8.1}$$

This formula shows that both forces are dependent on the distance between the cell and the substratum. If the bacterium is close to the surface, the van der Waals forces become more dominant and the cell will adhere to the surface irreversibly. On the other hand, if the distance between the cell and substratum becomes higher the van der Waals forces decrease drastically and the Coulomb interactions become more dominant resulting in the cell repelling from the surface [113]. In addition, the ionicity of the cell (Figure 8.1) plays an important role in bacterial adhesion. If the ionic strength is high, the positively and negatively charged particles will attract naturally towards each other. If the ionic strength is low by having the same charge, the particles will naturally repel. However, if the bacterial cell approaches to the surface due to its motility or Brownian motion a reversible adherence takes place. In this case, the bacterial cell needs to overcome a certain energy barrier. Once the bacterial cell comes close to the surface it can use its appendages like pili and flagella to attach to the surface. These appendages can pierce the energy barrier and bacterial adhesion is facilitated [113]. For clarity sake, the DLVO theory describes the probability of an organism to overcome any electrostatic barrier. However it does not describe the various molecular interactions

that would come into play when polymers at the bacterial surface enter into contact with molecular groups on the substratum as well as any conditioning film[31].Current research shows that there is a relation between the ionic strength and bacterial adhesion, which is consistent with the DLVO theory[114].

8.3.2 Thermodynamic theory

The thermodynamic is the physicochemical approach that has been used to delineate the bacterial attachment to surfaces. This approach expresses the van der Waals, electrostatic and dipole, in term of free energy, which is calculated using the following equation:

$$\Delta G^{adh} = \gamma_{sm} - \gamma_{sl} - \gamma_{ml} \tag{8.2}$$

where γ_{sm},γ_{sl} and γ_{ml} are the solid- microorganism, solid-liquid and microorganism-liquid free energies respectively. If the free energie is negative then the adhesion is favored.

On a more general note, the thermodynamic theory always assumes that the bacterial interaction is reversible, which is not the case. According to the thermodynamic approach, the distance between cell and surface is not important and this is in contrast to the conventional DLVO theory. The thermodynamic theory does not explain or predict the behaviors observed in bacterial systems. However, it explicates a common observation; namely the bacteria with hydrophilic properties prefer hydrophilic surfaces to attach to. The same applies to hydrophobic bacteria that prefer hydrophobic surfaces. Silva-Dias et al. insinuated that hydrophobicity plays a momentous role in the bacterial adhesion and the agglomeration of bacterial cells [115].

8.3.3 Extended DLVO theory

The hydrogen-bonding can be viewed as a more general electron-donor/electron-accepter interactions, namely, Lewis acid-base interactions [116]. This acid-base interactions led to the development in the extended DLVO theory, where the hydrophobic/hydrophilic as well as the osmotic interactions where included in the model. Nevertheless, the osmotic interactions in bacterial adhesion could be neglected, due to their low impact.

$$\Delta G^{adh} = \Delta G^{vdW} + \Delta G^{dl} + \Delta G^{ab} \tag{8.3}$$

where ΔG^{vdW} is the Lifshitz-van der Waals interaction, ΔG^{dl} is the electric double layer interaction, and ΔG^{ab} relates to acid–base interactions.

With the addition of hydrophobic and repulsive hydration effects the extended DLVO theory predicts adhesion results better than the conventional DLVO theory most of the time. Acid base interaction play an important role that lowers the energy barrier. However only at a small distance (5nm) from the surface become the acid base interactions functional [117].

8.4 Physicochemical Properties

8.4.1 Surface Charge

One of the characteristics that can affect the binding forces between the bacteria and the surface is the surface charge. Most of the bacterial cells are charged negatively, thus, negatively charged surfaces are more resistant against bacterial adhesion [6]. However, there are approaches that use positively charged surfaces. This approach aims at the elimination of bacterial cells on contact. These contact-killing coatings are based on positively charged polymers such as quaternary ammonium compounds (QAC); it has been proposed that extremely high electrostatic forces disrupt bacterial cell membranes by yielding removal of anionic lipids [102]. A disadvantage of this approach is that the dead cells form a layer on the surface which reduces the surface charge, thereby other microbial cells can adhere more easily to the surface [103]. Furthermore, there are types of bacteria that can modify the surface charge. Rzhepishevska et al. seconded that Pseudomonas aeruginosa on a negatively charged surface is an example of changing the surface charge to make it more convenient for other bacterial cells to adhere to the surface [104]. Therefore he concluded that looking only to the surface charge may not be sufficient for some types of bacteria.

8.4.2 Hydrophobicity

The hydrophobicity is a major feature that influences the interactions between bacteria and surface. Bacteria with a more hydrophobic cell surface preferentially colonize hydrophobic materials and vice versa. Preceding reports contend that superhydrophobic (>150°) and superhydrophilic (0°) surfaces seem to have an impact on the bacterial adhesion [118]. According to Huan Zhu et al., the method to translate the adhesion of superhydrophobic surfaces can have two distinct perspectives [119]. The first is to control the chemical composition and alter the surface geometric structure simultaneously, and the second is to provide external stimulations to induce transitions, which is the most common method for

obtaining switchable adhesion. Yuan et al. cited that on a superhydrophobic surface, the solid area fraction was reduced due to the entrapped air, and the bacterial adhesion was lowered. It is notable that self-cleaning ability of the surface against bacteria as well as the subsequent washing applied lead to the the reduction of the bacterial adhesion [120]. Hizal et al. claimed that the combination of superhydrophobic surfaces and fluid shear stress reduced the adherence of Staphylococcus aureus and Escherichia coli, due to the slipperiness of the superhydrophobic surface [121]. On the other hand, the superhydrophilic surfaces have good non-fouling properties due to the formation of a dense layer of water molecules, which weakens the interaction between the cell surface and substratum material and consequently reduces cell adhesion [122]. It has been previously claimed that, zitterionic polymers, which are neutral molecules with a positive and a negative electrical charge in close proximity, are used to coat material surfaces to obtain superhydrophilicity and reduce fouling [123, 124].

8.4.3 Surface roughness

An intensified surface roughness can directly be related to an increased bacterial adhesion [125]. The surface roughness is related to an increase in surface area, which makes it easier for the bacteria to attach. Furthermore, a rougher surface protects the bacterial cells from fluid shear forces [122, 126]. Nevertheless, Renner et al. alleged that there is no such thing as 'one size fits all' relationship between surface roughness and bacterial attachment, owing to the variation of bacterial strains in size and shape as well as the effect from the environmental conditions [127].

8.4.4 Surface topographical configuration

The definition of roughness based on the average amplitude of peaks and valleys is not sufficient to describe the 3-dimensional features of a surface. Recent studies have manifested that the way that peaks and valleys, otherwise known as topographical patterns, are distributed along the surface also plays an important role in microbial biofilm formation [122, 127]. The surface typography around the same diameter of the bacterial cell may entrap bacteria on a stainless steel surface [128]. Parameters like skewness and kurtosis need to be taken into account to understand bacterial cell attachment based on the typography of the surface.

8.4.5 Bacterial characteristics

On the other hand the Bacterial characteristics play also an important role in bacterial adhesion. Bacterial hydrophobicity and bacterial surface charge influence the possibility of

bacteria adhering to the surface. Despite knowing that bacterial characteristics influence bacterial adhesion it is hard to adapt the bacterial characteristics without influencing the growth process. Therefore the focus is mainly on changing the material surface characteristics. More research is needed on possible changes of bacterial characteristics in order to be a viable point of focus[31].

8.5 Techniques used to observe and measure bacterial adhesion

There are a lot of different techniques used to observe and measure the bacterial adhesion. Azeredo et al. made an overview of the different techniques used and separated all the techniques into four groups: chemical, physical, microscopy and biological [129]. He also mentions the advantages and limitations for each technique which are displayed in figure 8.2.

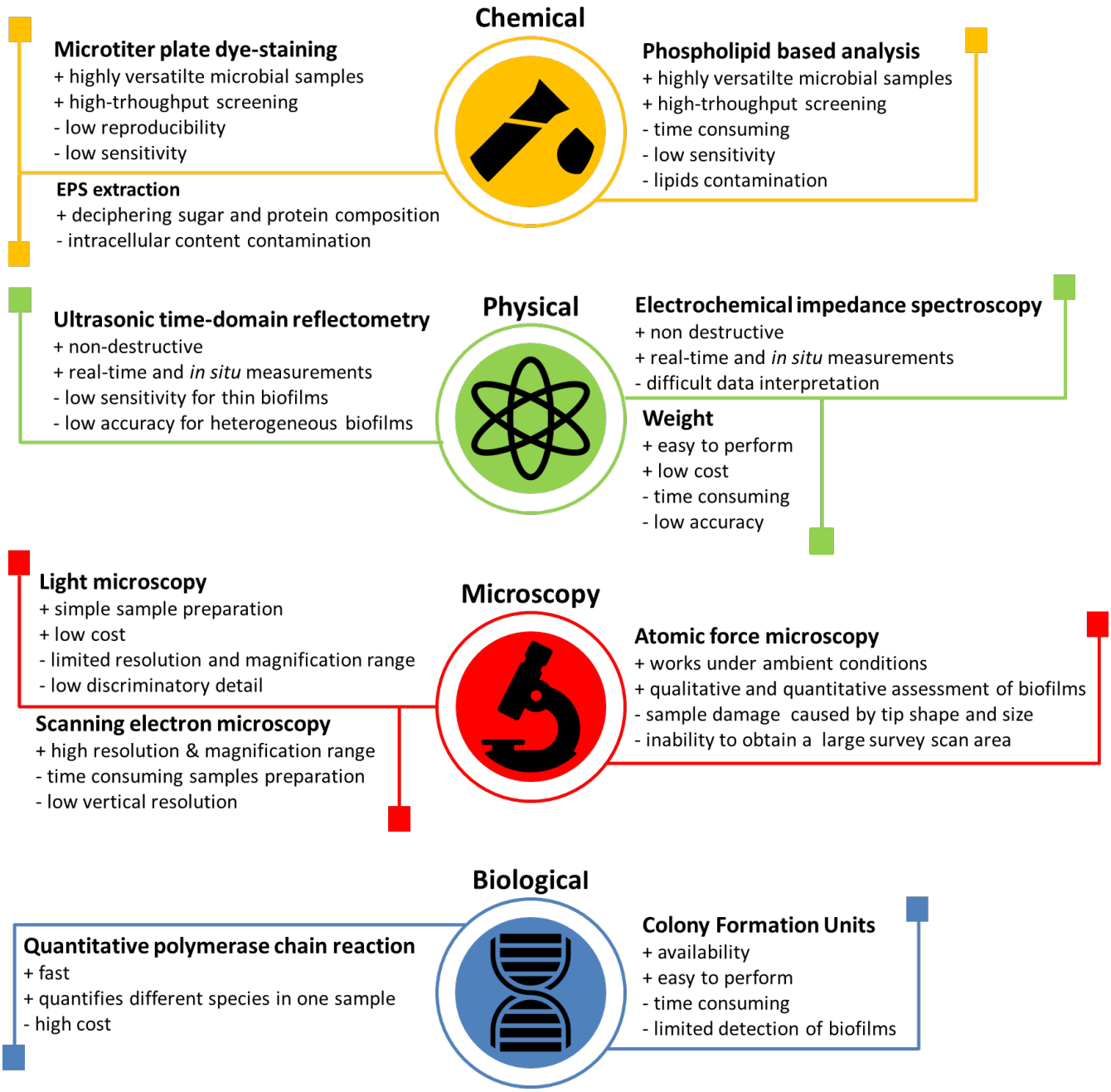

Fig. 8.2 Biofilm measuring techniques [129].

Chapter 9

Control of bacterial adhesion

9.1 Introduction

Many microorganisms in biofilms or in a sessile condition express different physiological phenotypes from those in the planktonic state. To obtain or effectively attain resistance to antibiotics, infection, nutrition, and so on, microorganisms adhere to surfaces by every possible means. In other words, they have evolved the mechanism for adhesion under various environmental conditions. Therefore, inhibition of adhesion and/or biofilm formation is quite difficult against all microorganisms in environments even if possible against specific target species. Nevertheless, effective methods for controlling biofilm formation or microbial adhesion have been developed recently. This section describes the advantages and limitations of such control technologies.

9.2 Antibacterial agent release coatings

Utilization of antibacterial agents is an easy and frequently used way to control biofilms. However planktonic cells are more susceptible antibacterial materials than the microorganism in biofilms. Microorganisms in biofilm are more protected due to the adaptability of the EPS layer protecting the bacteria from antibiotics. In particular, resistance of pathogenic bacteria in biofilms to antibiotics is at the root of many persistent and chronic bacterial infections. Release based coatings help to target bacterial infections locally.

Essentially a released based coating exerts antibacterial activity by leaching loaded antibacterial compounds over time. The antibacterial compounds makes sure that both adherent and adjacent planktonic bacteria are killed during the process. The release of incorporated antibacterial agents is achieved by diffusion into the aqueous medium, erosion/degradation,

or hydrolysis of covalent bonds[130]. The advantage of antibacterial agents is that the elution from the material surface offers the possibility to deliver a high antibacterial agent concentration locally, without exceeding systemic toxicity or ecotoxicity limits, compared to traditional delivery methods for antibiotics [131]. It provides antibacterial activity only where needed, thus minimizing the development of resistance and avoiding potentially harmful systemic repercussions.

In a review done by Cloutier et al. several design strategies that are used with antibacterial agent release coatings are described. These strategies can be separated into 3 groups: passive approaches, active approaches, and bacteria triggered approaches[131] (see figure 9.1).

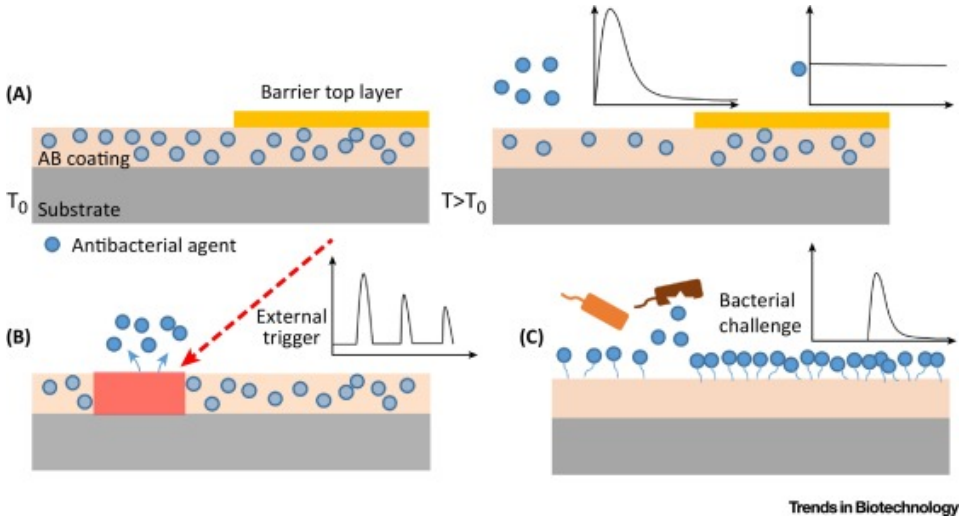

Fig. 9.1 Design strategies for antibacterial coatings: Passive approach (A) Tuning coating properties causes different release profiles, which can be either rapid bursts (left) or release is done linear (right). Active approach (B) External stimuli trigger the release of antibacterial agents. Bacterial trigger approach (C) Releasing antibacterial agents locally when the bacteria challenges the coating. [131]

The passive approach focuses on the different variables that have shown to be an influence on release kinetics and do not have an active trigger when to release antibacterial agents. This can be based on either the properties of the antibacterial agent, the carrier matrix, or the overall micro/nanostructure of the antibacterial coating [132, 133].

On the other hand the active approach uses stimuli responsive materials. These types of coatings require a trigger before releasing the antibacterial agents. Most commonly used triggers are physical exogenous stimuli. According to Cloutier et al. these offer great signal control and are not restricted by diffusion, which gives them potential for the use of bioactive coatings. These bioactive coatings can produce antibacterial agents on demand. This also

leads to an improved useful longevity of the coating.The main challenges facing stimuli-triggered coatings are to achieve release of meaningful doses over multiple cycles and to minimize non-triggered background leaching from surfaces[131, 134].

Lastly bacteria triggered approaches activate release profiles of antibacterial agents when the bacteria are in the vicinity or are coming into contact with with the coating. There are 2 ways of triggering the release of antibacterial agents, these coatings are either pH responsive or enzyme responsive (see figure 9.2). In the process of bacterial growth metabolism takes place. In the metabolism of bacteria the acidic acids like lactic acid or acetic acids are produced. Zhuk et al. uses poly-electrolyte multilayers (PEM) films as a release mechanism [135]. In acidic conditions, the coatings release bursts of antibiotics is determined by the degree of pH lowering. The driving force behind the release was reported to be the charge balance within the PEM films. In another research done by Lu et al. self defensive layer-by-layer coatings with bacteria triggered antibiotic release is used in the form of hydrogels [136]. Other mechanism make use of the cleavage of imine bonds[137].

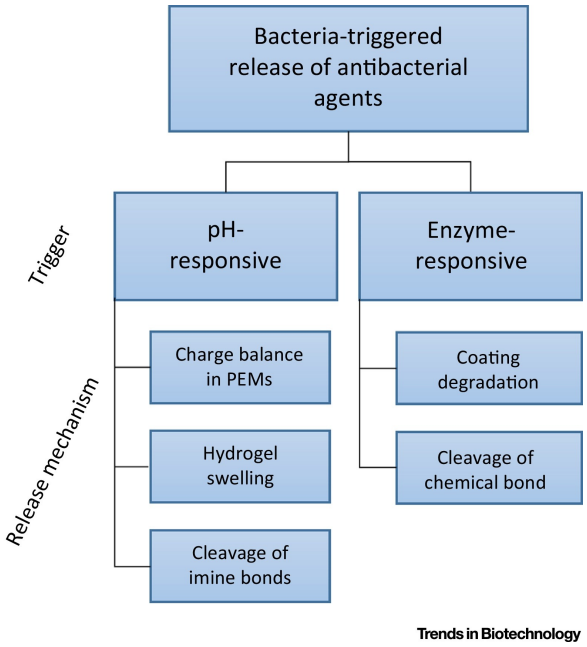

Fig. 9.2 Bacteria triggered release approaches and their release mechanisms[131]

The bacteria triggered release enzyme responsive coatings have an advantage in comparison to the pH responsive coatings. These triggers have the possibility to target specific bacteria, because enzymatic response coatings can differentiate between different bacteria strains. However this approach is fairly new and not well known. Till now two distinct ways of release have been reported, which are coating degradation and cleavage of chemical bonds[138–140]

9.3 Contact killing coatings

Contact killing surface or also called contact active surface is created by immobilizing antibacterial agents onto the surface platform. This is ussually done by covalent bonding.

Advantages of contact killing coatings in comparison to release coatings is that they are more sustainable. Furthermore contact killing coatings are harmless for the environment meaning no pollution. However contact killing surfaces do not have any bacterial adhesive resistance, instead contact killing as the name implies eliminates bacteria that come into contact with the surface. This is done by either physical damage or by non oxidative stress [141]. There are multple forms of contact killing coatings, which distinct themselves by the type of antibacterial agent attached to the surface and the proposed mechanisms of action in which the bacteria are eliminated.

9.3.1 Types of antibacterial agents

The most commonly reported contact active antibacterial agents include quaternary ammonium compounds (QACs) such as alkyl pyridiniums and quaternized poly(2-(dimethylamino)ethyl methacrylate), quaternary phosphoniums (QPs), and N-chloramines[141]. Green confirms that QACs are often used as AMA for contact killing coatings and makes a distinction between QACs based on silanes (Si-QAC) and QAC based on polymers. Furthermore a wide range of molecules have been tested as antibacterial agents, including guadines, enzymes, chitosan, peptides, peptoids and other peptide mimetics [142].

9.3.2 Bacterial elimination mechanism

The first mechanism was examined by Tiller et al. back in 2001. polymeric spacer effect[144]. According to him the long polymeric strings attached with the microbial agents were able to penetrate a hole in the membrane of a gram positive bacterium and with this eventually kill of the cell. However recent discoveries examined that the length of the polymer chain did not influence the antibacterial impact of the coating. Therefore some of the researchers question this spacer theory.

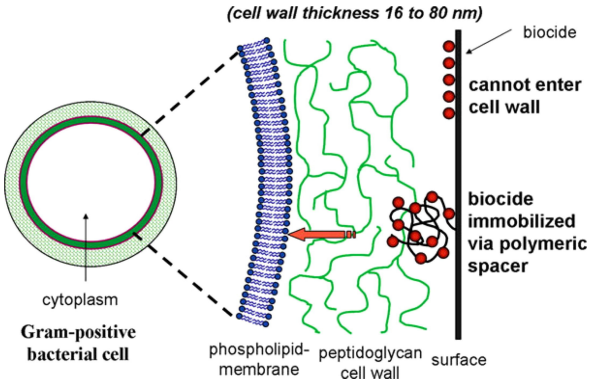

Fig. 9.3 Mechanism of contact-killing based on polymeric spacer effect [143]

.

The second mechanism was proposed by Kugler et al. According to him the exchanges in ions was responsible for the bacterial killing [145]. The ion-exchange model states that

exchange of divalent cations present on outer membrane of bacteria can occur with cations present on the charged surface. This exchange of ions leads to destabilization and loss of natural counterions of bacteria, leading to cell death.

The most recent mechanism was proposed by Bieser and Tiller et al, which is called the phospholipid sponge effect [146]. which states that the antimicrobial action occurs by the selective adhesion of negatively charged phospholipids in the bacterial cell membrane onto the cationic surface. An recent study performed by Gao et al. confirmed the existence of the phospholipid sponge effect[147]. Gao examined a negative correlation between the film cross-linking density and the absorption of a negatively charged phospholipid was observed, but no such correlations were observed with a neutral phospholipid, which strongly supported the action of anionic phospholipid suction proposed in the lipid sponge effect.

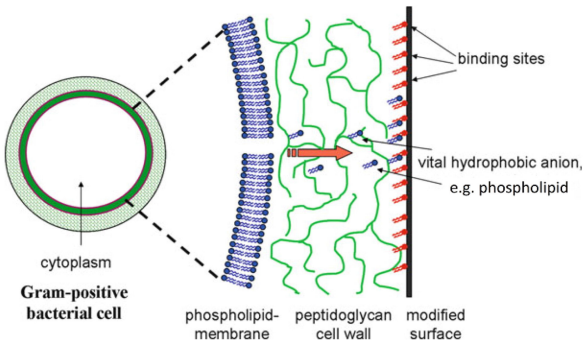

Fig. 9.4 Mechanism of contact-killing based on phospholipid sponge effect [143]

.

The three mechanisms described above are all based on contact killing QACs coatings, immobilizing either silanes or polymers as antibacterial agents. The last mechanism is only based on N-chloramines coatings. This mechanism is believed to be revolved around the active chlorine transfer.However, there is no experimental evidence for this proposal and more work is needed to explore the antibacterial mechanisms of N-chloramine modified surfaces [141].

9.4 Anti-adhesion/ bacteria repelling coatings

In contrast to the other two forms of antibacterial coatings the anti adhesion coatings aim to prevent the first step in biofilm formation using non cytotoxic mechanisms. As recalled in chapter 8 bacterial attachment to the surface occurs through several mechanisms and if not prevented in the first stage, biofilm formation can lead to serious infections. The control over surface hydrophobicity, charge, roughness and topographical configuration can drastically reduce the attachment of bacteria.

The most commonly used anti adhesion coating is Poly ethylene glycol (PEG). PEG chains are flexible and exhibit large steric repulsion forces, which may impede the approach

of bacteria towards the surface [148]. PEG was first used for anti fouling coatings against protein absorption and due to its preventative properties also commonly used for preventing bacterial adhesion. In general, higher molecular weight PEGs exhibited greater resistance to bacterial attachment than the lower molecular weight ones. However Ostuni et al. investigated if the protein resistance and bacteria resistance correlate to an extend to each other [149]. In the observation he made came that there was no correlation between the two and therefore concluded that other parameters are required to prevent the attachment of bacteria, due to the complexity of the of the mechanisms that result in bacterial attachment. Furthermore the PEG was not sustainable for long term usage[150].

Other anti adhesion coatings make use of surfactants to prevent bacterial attachment. Examples of these surfactant are hydroxypatite and chitosan or biological molecules such as albumin and heparin [151]. In a recent study performed by Buzzacchera et al. polymer brush functionalized chitosan are used as antifouling implant coatings to prevent bacterial adhesion[152]. The coatings were hydrophilic and reached a thickness of up to 180 nm within 30 min of polymerization. The functionalization of the surface with polymer brushes significantly reduced the fouling and eliminated platelet activation and leukocyte adhesion. Another approach for anti adhesion coatings is based on the hydrophobicity, where super hydrophobe or hydrophile coatings make the attachment for bacteria to the surface harder. This is in more detail described in chapter 8.

A more recent study uses a repellent film based on flagellin [153]. In this study a novel type of bacteria repellent layer made of the bacterial protein flagellin is demonstrated. These demonstrations showed that the flagellin protein forms an oriented and dens layer on a hydrophobic surface, which resulted into an effective bacterial cell repellent feature. The big advantage of fabricating flagellin based coatings is that it is cost effective because the protein can be rather easily produced in large amounts.

9.4.1 Multifunctional coatings

Because biological systems are inherently complex and hierarchically structured, coatings with multiple functions are necessary to achieve better performance in their environments and for specific applications. Recently, several multifunctional release-based antibacterial coatings have been developed; these can generally be grouped into three categories: multi-release, multi-approach, or multi-property [131].

As mentioned before there are different types of approaches with several release mechanisms to control bacterial adhesion. The multi-release coatings are coatings that combine different release mechanisms together, for example can both have material responsive and bacterial responsive release triggers of antibacterial agents. Multi-approach coatings combine

different approaches, for example a combination of release antibacterial agents, contact killing, and anti adhesion coatings [154]. But for future prospect in the microbiology industry coatings should focus on multi-property coatings. According to Variola et al. in these coatings the properties of surfaces of materials can be modified on a range of scales by various techniques [155]. In this case, the coating should not only prevent bacterial adhesion, but at the same time should have increased wear resistance, corrosion resistance, anticoagulation, etc[156].

Chapter 10

Experiment: Bacterial growth

10.1 Introduction

This chapter contains a detailed description of the experimental setup to investigate the bacterial growth in a 3D printed flask. This chapter will contain a methods and materials section, which will describe the preparations and the execution for the experiment. Furthermore data is obtained from the experiments, which will be shown in the results section and from the data conclusions are derived.

The main goal of the experiment is to investigate how the bacterial growth is in a 3D printed flask compared to a glass flask. The expectations are that the bacterial growth rates will be obtained for both types of material. However expectations are that growth rates for the 3D printed material will be lower compared to the glass material. This expectation is based on the material surface, which the 3D printed material has a higher roughness than that of glass.

The second goal of the experiment is to see if the sterilization process is sufficient. This is mainly tested for process stability and reproducibility. The obtained data will tell if the vessels are contaminated.The expectations regarding the sterilization are that thermal sterilization is not a viable option for the 3D printed material. This expectation is derived from the manufacturer which mentions that the material cannot withstand temperatures higher then 100°C. The back-up is to do the sterilization process chemically. However because chemical sterilization is not generally used and therefore it should be accurately monitored.

10.2 Materials/ methods

Before the experiment can be executed, some preparations need to be done. The first step is to prepare 100ml of medium for the growth of the *E.coli* or culture. Both *E.coli L.lactis* are used because they are fast growing bacteria. Furthermore the *E.coli* is a gram negative bacteria and *L.lactis* is a gram positive bacteria. For E.coli Lysogenic Broth (LB) is used as a medium and consists out of 10g/l peptone, 5g/l yeast extract and 5g/l NaCl dissolved in demiwater. for *L.lactis* M17 is used as a medium and consists of 38g/L M17 dissolved in demiwater. Also make a buffer demiwater and glucose. Afterwards sterilize all solutions in the autoclave. After sterilization is done add 50mmol glucose to the M17 medium.

The second step is to recreate the glass flask with a 3d printer, with approximately the same dimensions. In this case the dimensions are: a max. diameter (D) of 64mm, a min. diameter (d) of 21mm and a height of 105mm. These erlenmeyers are created using the 3d sketching program called fusion 360 and are displayed in figure 10.1.

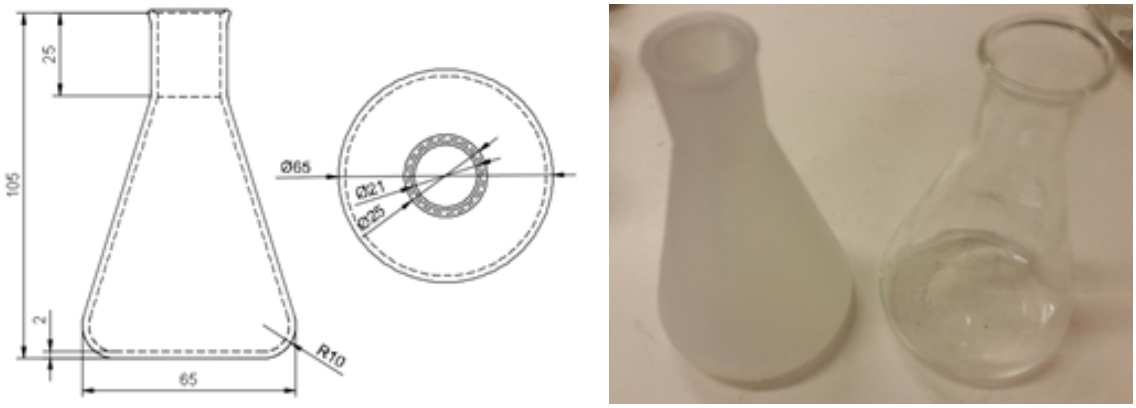

(a) (b)

Fig. 10.1 Image (a) displays a technical drawing of the 3D printed flask made in 360Fusion and image (b) displays the 3D printed flask next to the glass flask.

The third step is to sterilize the flasks. This is normally done by heating the flasks to high temperatures by autoclavation. However as shown from figure 10.2, the 3d printing material cannot withstand these high temperature and thermal cracks will appear. The thermal cracks result in leaking of the solution. Therefor the sterilization is done chemically, by filling the flasks with two different solutions and sealed with a paper cork. First the Erlenmeyer is filled with 100ml 1% Chloride for 10 minutes and afterwards emptied, second the Erlenmeyer is filled with 100ml 70% ethanol for 10 minutes and afterwards emptied. Finally the erlenmeyers are filled halve with 50ml sterilized demiwater and the Erlenmeyer is shaken for 30 seconds and flushed out.

Fig. 10.2 Display of the 3D printed flask after autoclavation. The material suffers from thermal cracking due to the high temperatures. This will result in leaking of the solution during the experiment

For this experiment two 100ml 3D printed flasks are used and 2 100ml glass flasks. One of each material is used to determine the bacterial growth rate and the other one is used to confirm if the chemical sterilization is sufficient and flasks are not contaminated.

In general each flask is filled with 20ml of medium and 100μl culture. Each flask is put on a shaker at a temperature of 31°C. Under these conditions the bacteria should be able to reproduce themselves. After 30min move the flasks to a sterile environment before taking samples. Take a sample of 200µl with a 200µl pipette from each of the flasks. These samples are inserted in a microtiterplate (figure 10.3). Then the microtiter plate is placed in the spectrometer. For the spectrophotometer is used a wavelength of 600nm to examine each sample. The spectrophotometer measures the scattering of light that comes from the sample. This data resembles the optical density (OD), from which the amount of cells of the bacteria type can

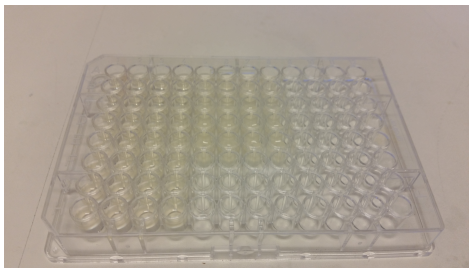

Fig. 10.3 Microtiterplate: Each half and hour a sample of 200μl is taken from the flasks, which is represented by each row of 4 samples. The columns A,B, E and F are filled with samples taken from 3D printed flasks and columns C, D, G and H are filled with samples taken from the glass flasks.

be determined. Repeat this process for every 30min. Eventually the data gives a logarithmic graph with as gradient the production rate of the *E.coli* culture.

During the experiment I encountered multiple difficulties, which should be taken into account when doing bacterial growth experiments. The first difficulty I encountered was the sustainability of a bacterial culture. From this I learned to prepare new medium at least every two days to make a new culture. The next problem I encountered has to do with the sterility. I did my experiments in a sterile environment, but forgot to check if every tool used was also sterile. Make sure that sterile pipettes are available and else prepare them, by using the autoclave, this way the solutions in the flasks will not get contaminated. The third difficulty I encountered was that during the experiments the 3D printed flasks would fall over, because of it not sticking to the strips that well. To overcome this I used beakers and made sure the flasks were in a stable condition. The final difficulty I encountered was based of the type of bacteria. From this I learned not to assume that the type of bacteria is the same as is written on the cuvette. Before culturing the bacteria that are needed for the experiment, look under the microscope to see if it is the right bacteria and let someone with more experience confirm this. These are some of the difficulties I encountered during my experiments, which resulted in weeks of time loss. These encounters lead to technical difficulties in the culturization of *L.lactis* and means that no experimental results are yet obtained with the *L.lactis* bacteria.

10.3 Results

The results of the bacterial growth of E.coli are shown in graph (figure 10.3). The results represent the average bacterial growth in a 3D printed and glass flask. This graph shows the first 7hours of the growth curve of E.coli and the growth after 24hours. In the graph the cell number, which is measured as the OD is set out against the time. To compare the difference in bacterial growth between the two materials, two factors are important to examine. The first factor is measured by the bacterial growth over time, which is determined in the exponential phase. The second factor is the maximum yield, which can be determined by looking at the value reached in the stationary phase. Besides that the experimental results will also confirm if the chemical sterilization process is sufficient.

The data gathered for the first 7hours show that the bacterial growth in a 3D printed flask on average is 7% slower than in a glass flask. This percentage can be derived by calculating the doubling time for both flasks (equation 10.1) and μ is the rate constant, which is given by the exponential equation shown in the graph. The doubling time in the 3D printed flask is 93min and for the glass flask it is 87min.

$$Doublingtime = \frac{Ln(2)}{\mu} \tag{10.1}$$

The value of the maximum yield is obtained by looking at the maximum OD, which can be determined in the stationary phase. The data after 24hours show that the values are fluctuating, but only by a slight margin. Hence, it can be assumed that the both cultures are still remaining in the stationary phase. From the graph it can be read that the maximum yield in the 3D printed flask (OD=1.55) is higher than for the glass flask (OD=1.41). This is a difference of 10% in favor of the 3D printed flask. However a difference of 10% is not a substantial amount to conclude that the maximum yield in 3D printed flasks is higher, given the small sample size. Therefore more experimental data needs to obtained.

The second objective is to confirm if the chemical sterilization process is sufficient. The results show that the flasks without culture added to the medium show no signs of increased cell number. As can be seen in the graph the OD in both 3D printed and glass flasks remain stable. Therefore it can be confirmed that chemical sterilization process works as intended and does not influence the results for the flasks containing a E.coli culture.

Furthermore the graph still has a large time gap in the data between 7 and 24 hours that needs to be obtained. This data gap is filled in using a combination of the exponential equation obtained from the first data points within the first 7hours and how the expected growth curve would look like. Ideally the whole growth curve of E.coli could be obtained using a time frame of 8 hours. A way to shorten the experiment could be to increase the initial culture that is added to the medium from $100\mu l$ to $200\mu l$ and $400\mu l$. This is shown in the graph by looking at the green and yellow lines respectively. These growth curves are calculated based on the exponential equation of the 3D printed flask with a higher initial input (N_0). From the yellow line it can be seen that if the initial input of culture is quadrupled, the experimental data for the growth curve until it reaches the stationary phase can be obtained within 7hours.

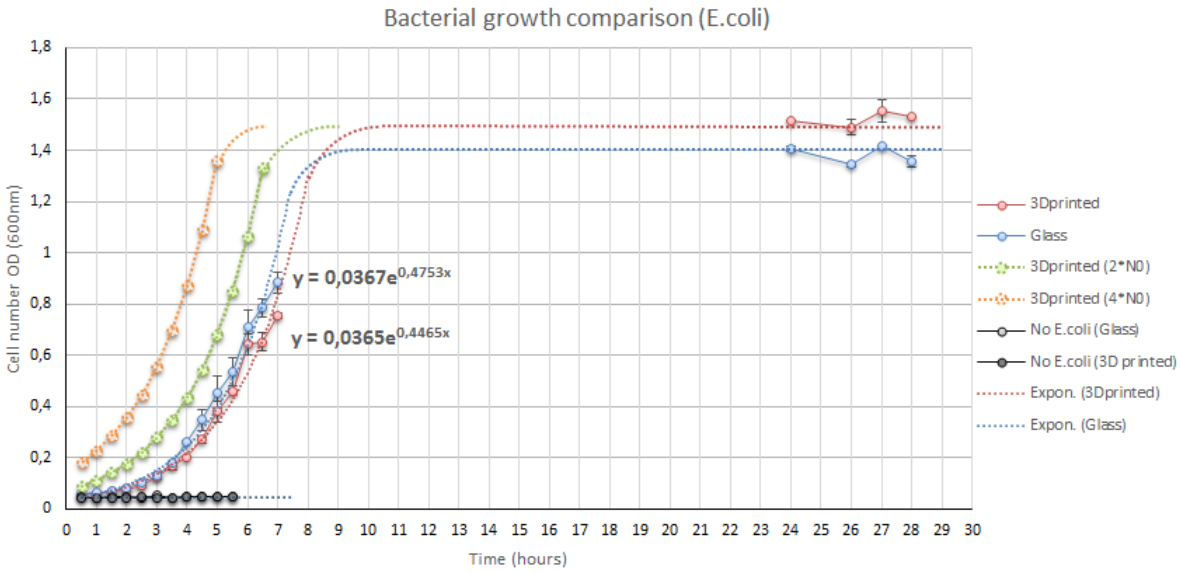

Fig. 10.4 This graph displays the results of the bacterial growth experiment and compares the growth curves for E.coli in a 3D printed flask and a glass flask. The red and blue dots are the data points that are obtained during the experiment for both 3D printed and glass flasks respectively. With this data the time gap is estimated to show the whole growth curve. The green and yellow lines represent the modeled growth curves with different initial culture inputs

10.4 Discussion/ Conclusion

In conclusion, the bacterial growth rate and maximum yield are obtained for 3D printed and glass flasks. The growth rates in 3D printed flasks are lower than in glass flasks. Results show that the doubling time is 7% slower in the 3D printed flask compared to the glass flask. However it was expected that the bacterial growth rates were slower for the 3D printed material, because of the material roughness. Further experiments should be done to investigate if the surface can be modified to improve bacterial growth rates.

Furthermore the experimental results show that the maximum yield in a 3D printed flask is higher compared to the conventional glass flask. Yet from these results it can not be concluded that this is the general case. Overall the data obtained show promising results for bacterial growth in 3D printed material, but from a small sample size as well as a large data gap it is hard to say for sure what is happening. Therefore more growth experiments are necessary to obtain a larger sample size before making concluding remarks.

Also the thermal sterilization process was tested for sterilization purposes, but the 3D printed material could not handle the high thermal condition, which resulted in thermal

cracking. Therefore the sterilization was performed chemically. The efficiency of the chemical sterilization is accurately monitored during the experiment by using flasks with no bacterial culture to examine if the flasks are not contaminated. Data confirmed that the chemical sterilization is sufficient and flasks without bacterial culture showed no increase in OD.

For future experiments it is convenient to perform experiments within a time frame of 7 to 8 hours. The Mathematical analysis shows that with an input of $400\mu l$ the growth curve until it reaches the stationary phase can be obtained within 7 hours. Moreover these growth experiments only investigate the bacterial growth over a short time period and further experiments should be performed to compare the bacterial growth on the long term.

Chapter 11

Experiment: Bacterial adhesion

11.1 Introduction

This chapter contains a detailed description of the experimental setup to investigate the bacterial adhesion in a 3D printed flask. This chapter will contain a methods and materials section, which will describe the preparations and the execution for the experiment. However due to unforeseen circumstances and the lack of time, the experiment is not performed yet. This means that no data is obtained. Instead of a results section a design section will be given. In the design section different scenarios will be sketched, that explains what the follow up steps would look like.

As mentioned in the last experiment, more information is needed about the long term growth of the bacteria. One of the major factors influence the growth on the long term is the bacterial adhesion. The main goal of this experiment is to investigate if bacterial adhesion is present and by how much. First experiments will test the bacterial adhesion of L.lactis on 3D printed material. Furthermore the material properties of the 3D material will be modified with the use of a anti-adhesion coating and will be compared to the original. The expectation is that more bacterial adhesion is visible for the non coated material compared to the coated material and the glass material, due to the material roughness of the 3D printed material.

For the experiment the bacteria L.lactis is used to examine the bacterial adhesion. This type of bacteria is used, because first of all it is a fast growing bacteria and second it is expected that this bacteria adheres better to the surface of a material, due to it being a gram positive bacteria, which has a membrane.

11.2 Materials/ methods

The first step is to make the design as simple as possible. To investigate bacterial adhesion only the material surface needs to be tested. For this experiment slides are designed and 3D printed. The slides have approximately the same measurements as a glass slide that can is used under the microscope. The measurements fore each slide are: 76mm x 23mm x 3 mm with a notch to lead the fluid flow. Furthermore the slides need to be angled in order for a fluid flow to exist. This is done by fabricating a standard with the 3D printer. Both designs are made in fusion 360 and are displayed in figure 11.1 and 11.2.

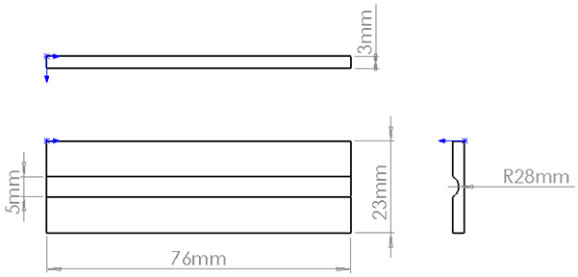

(a)

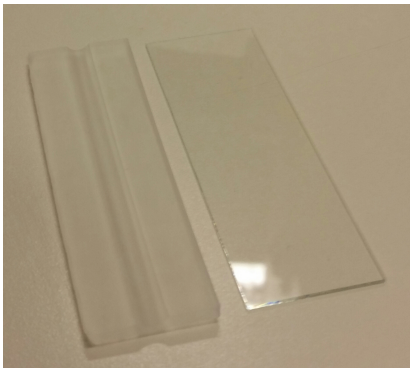

(b)

Fig. 11.1 Image (a) displays a technical drawing of the 3D printed slide made in Fusion 360 and image (b) displays the 3D printed slide next to the glass slide.

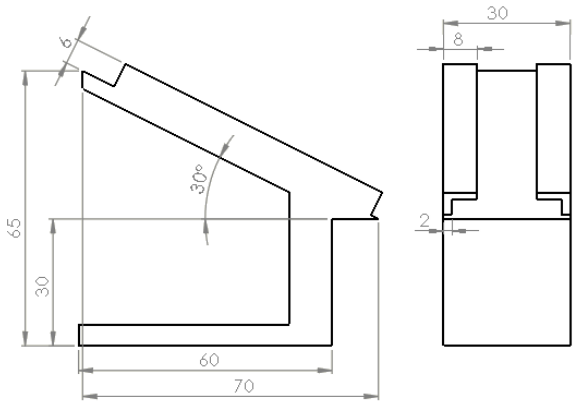

(a)

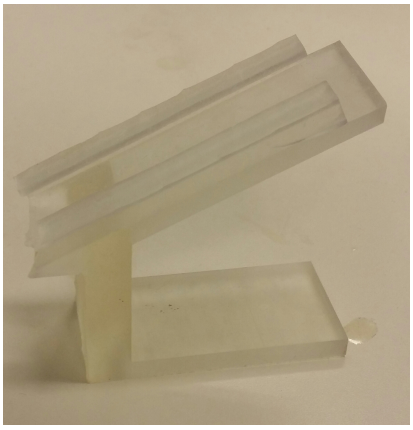

(b)

Fig. 11.2 Image (a) displays a technical drawing of the 3D printed standard made in Fusion 360 and image (b) displays the 3D printed standard used for the experiments.

After the slides are 3D printed some of the slides need to be coated. For this experiment four types of slides are used. The first two are the normal 3D printed slides without post processing and the microscopic slide made of glass. The third slide is coated with a anti adhesive solgel coating. To creat the solgel combine tetraethoxysilane (TEOS), methyltriethoxysilane (MTES), 70% ethanol and water with 4.5pH in a 1:1:1:1 volumetric ratio. After the solution is mixed, speed up the reaction by heating the mixture in a microwave for 10-20s. Mix until there is a homogeneous solution and put the mixture in an oven at 65C for 12hours to speed up the preconversion. The next day apply the solution to the notch of the 3D printed slide with a pencil.

The fourth slide is coated with the resin from the 3D printer. Take 10ml of resin and dilute it with 50ml of demi-water. The dilution of the resin is to make sure that the coating is equally spread. Afterwards a pencil is used to coat the notch of the 3D printed slide. Then shine the coating with UV light from a laser pen for at least 3-5min.

The next step is to setup the fluid flow for the continuous system. This is done with the help of a syringe pump (figure 11.2). The syringe pump is connected with a circulating tube system. The syringe pump is programmed to pump 0,5ml/min and withdraws 1ml/min for an infinite amount of cycles. First tests are done with water in the system to examine if any leakage would occur.

Fig. 11.3 Syringe pump used for circulating the fluid flow

The final step is to make sure that the system is located in the right environmental conditions. An incubator is used at 30C to sterilize the system and a magnetic stirrer to mix the solution in the beaker.

A schematic of the experimental setup to examine the bacterial adhesion is shown in figure 11.4 and works as followed. First add 200ml of medium to the beaker and add 100μl culture of L.lactis to the medium. Start the syringe pump so that it withdraws the solution from the beaker. Then the fluid gets pumped back through a tube connected to injection needle. The solution drips from the needle onto the material slide and from the slide back into the beaker. Then the process repeats itself again.

During the process the bacteria will grow and adhere to the surface of the slide. Therefore the slide is examined after 24 hours and see if any bacterial adhesion has taken place. Take the slide from the standard and measure the bacterial adhesion by looking under the microscope and using AFM. From the AFM a quantitative biofilm analysis is obtained to confirm findings

obtained with light microscopy or imaging techniques. The material surface is prior to and during the bacterial adhesion experiment characterized with AFM. AFM is used to determine the adhesion forces between biofilm and substratum, as well as cohesive strength and biofilm topography before hand and in between measurements. This process is repeated every 24hours for a period of 5 days.

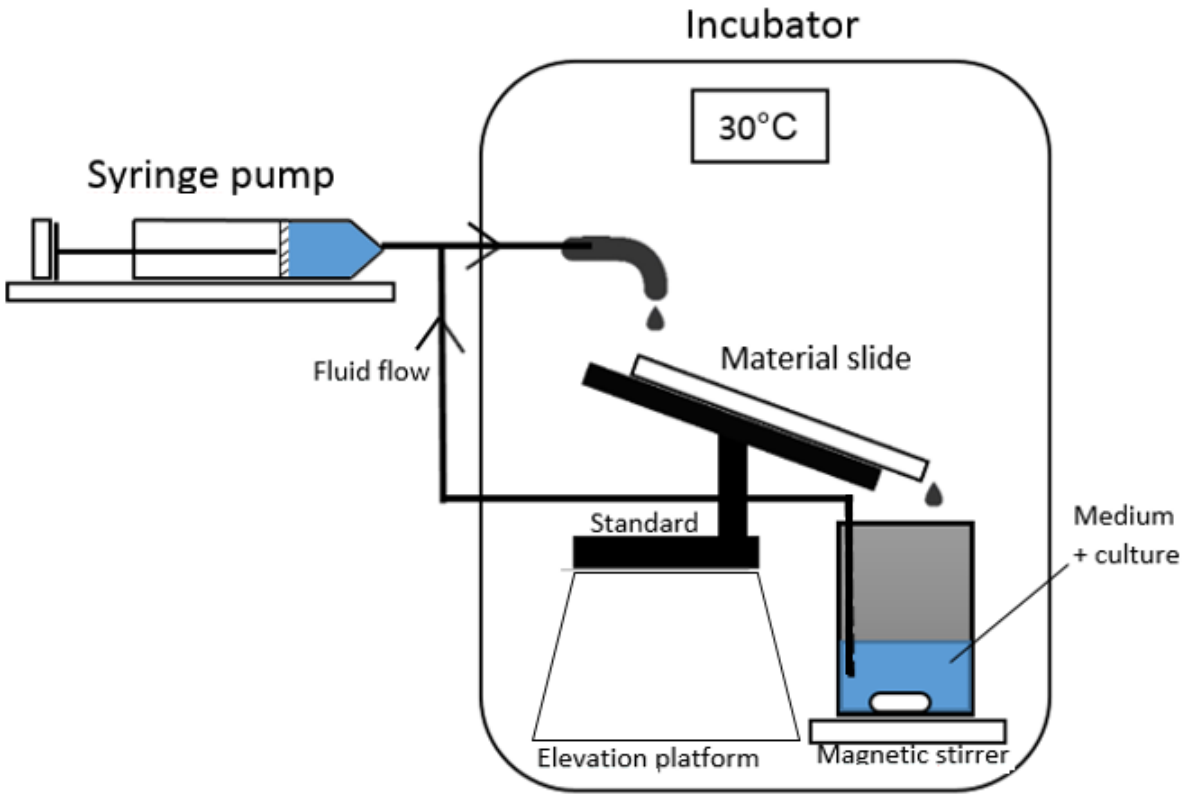

Fig. 11.4 Schematic of the experimental setup to examine the bacterial adhesion.

11.3 Experimental design

As mentioned in the introduction no experiments have yet been performed with the described experimental setup, which means no data has been gathered. However in this section different scenario's that could be taking place as a result of the experiment are described and how to react to each of the results.

The first scenario to describe has to do with the time that is used for a single experiment. Depending on the type of bacteria and material surface the bacterial adhesion will occur faster. The experiment can either be setup to long or to short, which results into non useful data. The first thing that comes to mind is to increase/ decrease the experimental time and

the time of each measurement. Another parameter that can be changed in this experimental setup is the fluid flow. The liquid shear stress influences the adhesive probabilities of the bacteria. The fluid flow can be changed in two distinct ways. The first is to change the angle of the standard. The second is to change the pumping speed of the syringe pump. The second solution is more convenient, because no extra parts need to be printed and it is easily accessible.

The second scenario describes the outcome of the experiment. The 4 material surfaces differ in surface characteristics. Based on these surface characteristics it is expected that the glass surface has the least bacterial adhesive properties. The aim is to achieve equal or less bacterial adhesion compared to the glass material. Also it is important to investigate if the coated slides adhere less bacteria then the non coated slides. If this is the case bacterial growth experiments should be performed to examine if the coating influences the bacterial growth.

Chapter 12

Conclusion

In conclusion, a SLA 3D printing technique is used to create 3D printed flasks for bacterial growth experiments. Advantage of the 3D printed material is that it is more flexible in design and size, which is essential in scaling down a bioreactor system. The goal of the experiment was to test if the 3D printed material is a good alternative material compared to glass. This goal was measured based on the bioreactor performance, which was set to be at least 90% compared to the conventional material. Bacterial growth experiments with *E.coli* for both glass and 3D printed flasks were performed to compare the performance based around the bacterial growth. These experiments showed promising results where the bacterial growth in 3D printed flasks only showed that growth rates for *E.coli* are 7% slower compared to glass flasks. Furthermore the maximum yield turned out to be even higher in the 3D printed flasks compared to the glass flasks. However differences remain to be only small percentages from a small sample size. In the future similar experiments need to be performed to increase the sample size and also to test the growth rates for different types of bacteria in 3D printed material.

A large impact factor in bacterial growth is the bacterial adhesion. Decreasing the bacterial adhesion could result in faster growth rates and higher maximum yield. A experimental setup was made to test the bacterial adhesion and to see if a solgel or polymer coating adhere less bacteria compared to non coated or glass material. Due to lack of time these experiments have not been performed. These experiments are an important step in understanding how much weight bacterial adhesion has on the performance of the bioreactor.

References

[1] J. Nielsen, J. Villadsen, and G. Lidén, "Bioreactor engineering principles 2nd ed," 2003.

[2] J. Williams, "Keys to bioreactor selection, cep magazine, 2002," *Google Scholar*, pp. 34–41, 2007.

[3] H. S. Fogler *et al.*, "Elements of chemical reaction engineering," 1999.

[4] H. Bouallagui, Y. Touhami, R. B. Cheikh, and M. Hamdi, "Bioreactor performance in anaerobic digestion of fruit and vegetable wastes," *Process biochemistry*, vol. 40, no. 3, pp. 989–995, 2005.

[5] D. De Silva, V. Urbain, D. Abeysinghe, and B. Rittmann, "Advanced analysis of membrane-bioreactor performance with aerobic-anoxic cycling," *Water Science and Technology*, vol. 38, no. 4-5, pp. 505–512, 1998.

[6] A. Lübbert and S. B. Jørgensen, "Bioreactor performance: a more scientific approach for practice," *Journal of Biotechnology*, vol. 85, no. 2, pp. 187–212, 2001.

[7] P. M. Doran, *Bioprocess engineering principles*. Academic press, 1995.

[8] W. Klöckner and J. Büchs, "Advances in shaking technologies," *Trends in biotechnology*, vol. 30, no. 6, pp. 307–314, 2012.

[9] J. Merchuk, A. Contreras, F. Garcia, and E. Molina, "Studies of mixing in a concentric tube airlift bioreactor with different spargers," *Chemical Engineering Science*, vol. 53, no. 4, pp. 709–719, 1998.

[10] C. Lattermann and J. Büchs, "Design and operation of microbioreactor systems for screening and process development," *Bioreactors: Design, Operation and Novel Applications*, 2016.

[11] M. L. Velez-Suberbie, J. P. Betts, K. L. Walker, C. Robinson, B. Zoro, and E. Keshavarz-Moore, "High throughput automated microbial bioreactor system used for clone selection and rapid scale-down process optimization," *Biotechnology progress*, vol. 34, no. 1, pp. 58–68, 2018.

[12] D. Bartlett, "Pressure effects on in vivo microbial processes," *Biochimica et Biophysica Acta (BBA)-Protein Structure and Molecular Enzymology*, vol. 1595, no. 1-2, pp. 367–381, 2002.

[13] J. Hemmerich, S. Noack, W. Wiechert, and M. Oldiges, "Microbioreactor systems for accelerated bioprocess development," *Biotechnology journal*, vol. 13, no. 4, p. 1700141, 2018.

[14] A. W. Nienow, C. D. Rielly, K. Brosnan, N. Bargh, K. Lee, K. Coopman, and C. J. Hewitt, "The physical characterisation of a microscale parallel bioreactor platform with an industrial cho cell line expressing an igg4," *Biochemical engineering journal*, vol. 76, pp. 25–36, 2013.

[15] R. Bareither, N. Bargh, R. Oakeshott, K. Watts, and D. Pollard, "Automated disposable small scale reactor for high throughput bioprocess development: a proof of concept study," *Biotechnology and bioengineering*, vol. 110, no. 12, pp. 3126–3138, 2013.

[16] J. I. Betts and F. Baganz, "Miniature bioreactors: current practices and future opportunities," *Microbial cell factories*, vol. 5, no. 1, p. 21, 2006.

[17] J. I. Betts, S. D. Doig, and F. Baganz, "Characterization and application of a miniature 10 ml stirred-tank bioreactor, showing scale-down equivalence with a conventional 7 l reactor," *Biotechnology progress*, vol. 22, no. 3, pp. 681–688, 2006.

[18] P. Watts and C. Wiles, "Micro reactors: a new tool for the synthetic chemist," *Organic & biomolecular chemistry*, vol. 5, no. 5, pp. 727–732, 2007.

[19] N. Szita, P. Boccazzi, Z. Zhang, P. Boyle, A. J. Sinskey, and K. F. Jensen, "Development of a multiplexed microbioreactor system for high-throughput bioprocessing," *Lab on a Chip*, vol. 5, no. 8, pp. 819–826, 2005.

[20] H. L. Lee, P. Boccazzi, R. J. Ram, and A. J. Sinskey, "Microbioreactor arrays with integrated mixers and fluid injectors for high-throughput experimentation with ph and dissolved oxygen control," *Lab on a Chip*, vol. 6, no. 9, pp. 1229–1235, 2006.

[21] M. M. Maharbiz, W. J. Holtz, R. T. Howe, and J. D. Keasling, "Microbioreactor arrays with parametric control for high-throughput experimentation," *Biotechnology and bioengineering*, vol. 85, no. 4, pp. 376–381, 2004.

[22] R. Hortsch, A. Stratmann, and D. Weuster-Botz, "New milliliter-scale stirred tank bioreactors for the cultivation of mycelium forming microorganisms," *Biotechnology and bioengineering*, vol. 106, no. 3, pp. 443–451, 2010.

[23] R. Hortsch and D. Weuster-Botz, "Power consumption and maximum energy dissipation in a milliliter-scale bioreactor," *Biotechnology progress*, vol. 26, no. 2, pp. 595–599, 2010.

[24] A. Amanullah, J. M. Otero, M. Mikola, A. Hsu, J. Zhang, J. Aunins, H. B. Schreyer, J. A. Hope, and A. P. Russo, "Novel micro-bioreactor high throughput technology for cell culture process development: Reproducibility and scalability assessment of fed-batch cho cultures," *Biotechnology and bioengineering*, vol. 106, no. 1, pp. 57–67, 2010.

[25] E. Figallo, C. Cannizzaro, S. Gerecht, J. A. Burdick, R. Langer, N. Elvassore, and G. Vunjak-Novakovic, "Micro-bioreactor array for controlling cellular microenvironments," *Lab on a Chip*, vol. 7, no. 6, pp. 710–719, 2007.

[26] E. Cimetta, E. Figallo, C. Cannizzaro, N. Elvassore, and G. Vunjak-Novakovic, "Micro-bioreactor arrays for controlling cellular environments: design principles for human embryonic stem cell applications," *Methods*, vol. 47, no. 2, pp. 81–89, 2009.

[27] V. Janakiraman, C. Kwiatkowski, R. Kshirsagar, T. Ryll, and Y.-M. Huang, "Application of high-throughput mini-bioreactor system for systematic scale-down modeling, process characterization, and control strategy development," *Biotechnology progress*, vol. 31, no. 6, pp. 1623–1632, 2015.

[28] F. Delouvroy, G. Siriez, A.-V. Tran, L. Mukankurayija, N. Kochanowski, and L. Malphettes, "ambr™ mini-bioreactor as a high-throughput tool for culture process development to accelerate transfer to stainless steel manufacturing scale: comparability study from process performance to product quality attributes," in *BMC proceedings*, vol. 9, p. P78, BioMed Central, 2015.

[29] D. Bulnes-Abundis, L. M. Carrillo-Cocom, D. Aráiz-Hernández, A. García-Ulloa, M. Granados-Pastor, P. B. Sánchez-Arreola, G. Murugappan, and M. M. Alvarez, "A simple eccentric stirred tank mini-bioreactor: Mixing characterization and mammalian cell culture experiments," *Biotechnology and bioengineering*, vol. 110, no. 4, pp. 1106–1118, 2013.

[30] D. B. Nickel, M. N. Cruz-Bournazou, T. Wilms, P. Neubauer, and A. Knepper, "Online bioprocess data generation, analysis, and optimization for parallel fed-batch fermentations in milliliter scale," *Engineering in Life Sciences*, vol. 17, no. 11, pp. 1195–1201, 2017.

[31] M. Katsikogianni and Y. Missirlis, "Concise review of mechanisms of bacterial adhesion to biomaterials and of techniques used in estimating bacteria-material interactions," *Eur Cell Mater*, vol. 8, no. 3, pp. 37–57, 2004.

[32] J. Manyika, M. Chui, J. Bughin, R. Dobbs, P. Bisson, and A. Marrs, *Disruptive technologies: Advances that will transform life, business, and the global economy*, vol. 180. McKinsey Global Institute San Francisco, CA, 2013.

[33] C. L. Ventola, "Medical applications for 3d printing: current and projected uses," *Pharmacy and Therapeutics*, vol. 39, no. 10, p. 704, 2014.

[34] N. Bhattacharjee, A. Urrios, S. Kang, and A. Folch, "The upcoming 3d-printing revolution in microfluidics," *Lab on a Chip*, vol. 16, no. 10, pp. 1720–1742, 2016.

[35] M. P. Chae, W. M. Rozen, P. G. McMenamin, M. W. Findlay, R. T. Spychal, and D. J. Hunter-Smith, "Emerging applications of bedside 3d printing in plastic surgery," *Frontiers in surgery*, vol. 2, p. 25, 2015.

[36] K. Jain, C. Wu, S. V. Atre, G. Jovanovic, V. Narayanan, S. Kimura, V. Sprenkle, N. Canfield, and S. Roy, "Synthesis of nanoparticles in high temperature ceramic microreactors: design, fabrication and testing," *International Journal of Applied Ceramic Technology*, vol. 6, no. 3, pp. 410–419, 2009.

[37] R. Knitter and M. A. Liauw, "Ceramic microreactors for heterogeneously catalysed gas-phase reactions," *Lab on a Chip*, vol. 4, no. 4, pp. 378–383, 2004.

[38] F. Kotz, K. Arnold, W. Bauer, D. Schild, N. Keller, K. Sachsenheimer, T. M. Nargang, C. Richter, D. Helmer, and B. E. Rapp, "Three-dimensional printing of transparent fused silica glass," *Nature*, vol. 544, no. 7650, p. 337, 2017.

[39] A. Selimis, V. Mironov, and M. Farsari, "Direct laser writing: Principles and materials for scaffold 3d printing," *Microelectronic Engineering*, vol. 132, pp. 83–89, 2015.

[40] S. V. Murphy and A. Atala, "3d bioprinting of tissues and organs," *Nature biotechnology*, vol. 32, no. 8, p. 773, 2014.

[41] A. T. Woolley and R. A. Mathies, "Ultra-high-speed dna fragment separations using microfabricated capillary array electrophoresis chips," *Proceedings of the National Academy of Sciences*, vol. 91, no. 24, pp. 11348–11352, 1994.

[42] J. Mellors, V. Gorbounov, R. Ramsey, and J. Ramsey, "Fully integrated glass microfluidic device for performing high-efficiency capillary electrophoresis and electrospray ionization mass spectrometry," *Analytical chemistry*, vol. 80, no. 18, pp. 6881–6887, 2008.

[43] A. Bens, H. Seitz, G. Bermes, M. Emons, A. Pansky, B. Roitzheim, E. Tobiasch, and C. Tille, "Non-toxic flexible photopolymers for medical stereolithography technology," *Rapid Prototyping Journal*, vol. 13, no. 1, pp. 38–47, 2007.

[44] H. Becker and C. Gaertner, "Polymer based micro-reactors," *Reviews in Molecular Biotechnology*, vol. 82, no. 2, pp. 89–99, 2001.

[45] H. Becker and C. Gärtner, "Polymer microfabrication methods for microfluidic analytical applications," *ELECTROPHORESIS: An International Journal*, vol. 21, no. 1, pp. 12–26, 2000.

[46] K. Geyer and P. H. Seeberger, "Optimization of glycosylation reactions in a microreactor," *Helvetica chimica acta*, vol. 90, no. 2, pp. 395–403, 2007.

[47] B. Yen, A. GUnther, M. Thalmann, M. G. Bawendi, and K. F. Jensen, "A microfabricated segmented-flow reactor for the synthesis of cadmium selenide quantum dots," *SPECIAL PUBLICATION-ROYAL SOCIETY OF CHEMISTRY*, vol. 297, pp. 127–129, 2004.

[48] V. Hessel, H. Löwe, and S. Hardt, *Chemical micro process engineering: fundamentals, modelling and reactions*, vol. 1. John Wiley & Sons, 2004.

[49] E. O. t. Olakanmi, R. Cochrane, and K. Dalgarno, "A review on selective laser sintering/melting (sls/slm) of aluminium alloy powders: Processing, microstructure, and properties," *Progress in Materials Science*, vol. 74, pp. 401–477, 2015.

[50] S. Derakhshanfar, R. Mbeleck, K. Xu, X. Zhang, W. Zhong, and M. Xing, "3d bioprinting for biomedical devices and tissue engineering: A review of recent trends and advances," *Bioactive materials*, vol. 3, no. 2, pp. 144–156, 2018.

[51] C. Yan, L. Hao, A. Hussein, P. Young, J. Huang, and W. Zhu, "Microstructure and mechanical properties of aluminium alloy cellular lattice structures manufactured by direct metal laser sintering," *Materials Science and Engineering: A*, vol. 628, pp. 238–246, 2015.

[52] F. Ning, W. Cong, J. Qiu, J. Wei, and S. Wang, "Additive manufacturing of carbon fiber reinforced thermoplastic composites using fused deposition modeling," *Composites Part B: Engineering*, vol. 80, pp. 369–378, 2015.

[53] A. K. Au, W. Lee, and A. Folch, "Mail-order microfluidics: evaluation of stereolithography for the production of microfluidic devices," *Lab on a Chip*, vol. 14, no. 7, pp. 1294–1301, 2014.

[54] S. Liu, F. Ye, L. Liu, and Q. Liu, "Feasibility of preparing of silicon nitride ceramics components by aqueous tape casting in combination with laminated object manufacturing," *Materials & Design (1980-2015)*, vol. 66, pp. 331–335, 2015.

[55] X. Zhang and Y. Zhang, "Tissue engineering applications of three-dimensional bioprinting," *Cell biochemistry and biophysics*, vol. 72, no. 3, pp. 777–782, 2015.

[56] D. F. Williams, *Definitions in Biomaterials: Proceedings of a Consensus Conference of the European Society for Biomaterials, Chester, Engl., March 3-5, 1986*. Elsevier, 1987.

[57] D. F. Williams, "On the mechanisms of biocompatibility," *Biomaterials*, vol. 29, no. 20, pp. 2941–2953, 2008.

[58] J. Black, *Biological performance of materials: fundamentals of biocompatibility*. Crc Press, 2005.

[59] D. F. Williams, "Biocompatibility pathways in tissue-engineering templates," *Engineering*, vol. 4, no. 2, pp. 286–290, 2018.

[60] R. M. Maier and I. L. Pepper, "Bacterial growth," in *Environmental Microbiology (Third Edition)*, pp. 37–56, Elsevier, 2015.

[61] O. C. Microbiology, *Temparature and microbial growth*. OpenStax College Microbiology, 2016.

[62] C. Mao, Y. Feng, X. Wang, and G. Ren, "Review on research achievements of biogas from anaerobic digestion," *Renewable and Sustainable Energy Reviews*, vol. 45, pp. 540–555, 2015.

[63] K. Hagos, J. Zong, D. Li, C. Liu, and X. Lu, "Anaerobic co-digestion process for biogas production: Progress, challenges and perspectives," *Renewable and Sustainable Energy Reviews*, vol. 76, pp. 1485–1496, 2017.

[64] K. Chae, A. Jang, S. Yim, and I. S. Kim, "The effects of digestion temperature and temperature shock on the biogas yields from the mesophilic anaerobic digestion of swine manure," *Bioresource technology*, vol. 99, no. 1, pp. 1–6, 2008.

[65] A. J. Ward, P. J. Hobbs, P. J. Holliman, and D. L. Jones, "Optimisation of the anaerobic digestion of agricultural resources," *Bioresource technology*, vol. 99, no. 17, pp. 7928–7940, 2008.

[66] F. Mosey and X. Fernandes, "Patterns of hydrogen in biogas from the anaerobic digestion of milk-sugars," in *Water Pollution Research and Control Brighton*, pp. 187–196, Elsevier, 1988.

[67] M. Kim, C. Y. Gomec, Y. Ahn, and R. Speece, "Hydrolysis and acidogenesis of particulate organic material in mesophilic and thermophilic anaerobic digestion," *Environmental technology*, vol. 24, no. 9, pp. 1183–1190, 2003.

[68] M. A. Latif, C. M. Mehta, and D. J. Batstone, "Low ph anaerobic digestion of waste activated sludge for enhanced phosphorous release," *Water research*, vol. 81, pp. 288–293, 2015.

[69] T. Zhang, C. Mao, N. Zhai, X. Wang, and G. Yang, "Influence of initial ph on thermophilic anaerobic co-digestion of swine manure and maize stalk," *Waste management*, vol. 35, pp. 119–126, 2015.

[70] P. Tsapekos, P. Kougias, S. Vasileiou, G. Lyberatos, and I. Angelidaki, "Effect of micro-aeration and inoculum type on the biodegradation of lignocellulosic substrate," *Bioresource technology*, vol. 225, pp. 246–253, 2017.

[71] S. Montalvo, S. Vielma, R. Borja, C. Huiliñir, L. Guerrero, *et al.*, "Increase in biogas production in anaerobic sludge digestion by combining aerobic hydrolysis and addition of metallic wastes," *Renewable Energy*, vol. 123, no. C, pp. 541–548, 2018.

[72] J. Lindmark, E. Thorin, R. B. Fdhila, and E. Dahlquist, "Effects of mixing on the result of anaerobic digestion," *Renewable and Sustainable Energy Reviews*, vol. 40, pp. 1030–1047, 2014.

[73] H. Dhar, P. Kumar, S. Kumar, S. Mukherjee, and A. N. Vaidya, "Effect of organic loading rate during anaerobic digestion of municipal solid waste," *Bioresource technology*, vol. 217, pp. 56–61, 2016.

[74] R. M. Ferguson, F. Coulon, and R. Villa, "Organic loading rate: A promising microbial management tool in anaerobic digestion," *Water research*, vol. 100, pp. 348–356, 2016.

[75] I. D. Kariyama, X. Zhai, and B. Wu, "Influence of mixing on anaerobic digestion efficiency in stirred tank digesters: A review," *Water research*, 2018.

[76] J. Lindmark, P. Eriksson, and E. Thorin, "The effects of different mixing intensities during anaerobic digestion of the organic fraction of municipal solid waste," *Waste management*, vol. 34, no. 8, pp. 1391–1397, 2014.

[77] J. Lindmark, P. Eriksson, and E. Thorin, "The effects of different mixing intensities during anaerobic digestion of the organic fraction of municipal solid waste," *Waste management*, vol. 34, no. 8, pp. 1391–1397, 2014.

[78] C. Gou, Z. Yang, J. Huang, H. Wang, H. Xu, and L. Wang, "Effects of temperature and organic loading rate on the performance and microbial community of anaerobic co-digestion of waste activated sludge and food waste," *Chemosphere*, vol. 105, pp. 146–151, 2014.

[79] M. A. Dareioti and M. Kornaros, "Effect of hydraulic retention time (hrt) on the anaerobic co-digestion of agro-industrial wastes in a two-stage cstr system," *Bioresource technology*, vol. 167, pp. 407–415, 2014.

[80] A. Haryanto, S. Triyono, and N. H. Wicaksono, "Effect of hydraulic retention time on biogas production from cow dung in a semi continuous anaerobic digester.," *International Journal of Renewable Energy Development*, vol. 7, no. 2, 2018.

[81] L. M. Coughlan, P. D. Cotter, C. Hill, and A. Alvarez-Ordóñez, "New weapons to fight old enemies: novel strategies for the (bio) control of bacterial biofilms in the food industry," *Frontiers in microbiology*, vol. 7, p. 1641, 2016.

[82] S. Kumari and P. K. Sarkar, "Bacillus cereus hazard and control in industrial dairy processing environment," *Food Control*, vol. 69, pp. 20–29, 2016.

[83] H. Dang and C. R. Lovell, "Microbial surface colonization and biofilm development in marine environments," *Microbiology and Molecular Biology Reviews*, vol. 80, no. 1, pp. 91–138, 2016.

[84] N. J. Ashbolt, "Microbial contamination of drinking water and human health from community water systems," *Current environmental health reports*, vol. 2, no. 1, pp. 95–106, 2015.

[85] A. Vigneron, E. B. Alsop, B. Chambers, B. P. Lomans, I. M. Head, and N. Tsesmetzis, "Complementary microorganisms in highly corrosive biofilms from an offshore oil production facility," *Applied and environmental microbiology*, pp. AEM–03842, 2016.

[86] C. Neyret, J.-M. Herry, T. Meylheuc, and F. Dubois-Brissonnet, "Plant-derived compounds as natural antimicrobials to control paper mill biofilms," *Journal of industrial microbiology & biotechnology*, vol. 41, no. 1, pp. 87–96, 2014.

[87] P. J. Bispo, W. Haas, and M. S. Gilmore, "Biofilms in infections of the eye," *Pathogens*, vol. 4, no. 1, pp. 111–136, 2015.

[88] P. Marsh and E. Zaura, "Dental biofilm: ecological interactions in health and disease," *Journal of clinical periodontology*, vol. 44, pp. S12–S22, 2017.

[89] M. Ansari, H. Khan, A. Khan, S. Cameotra, M. Alzohairy, *et al.*, "Anti-biofilm efficacy of silver nanoparticles against mrsa and mrse isolated from wounds in a tertiary care hospital," *Indian journal of medical microbiology*, vol. 33, no. 1, p. 101, 2015.

[90] B. Moen, E. Røssvoll, I. Måge, T. Møretrø, and S. Langsrud, "Microbiota formed on attached stainless steel coupons correlates with the natural biofilm of the sink surface in domestic kitchens," *Canadian journal of microbiology*, vol. 62, no. 2, pp. 148–160, 2015.

[91] T. R. Garrett, M. Bhakoo, and Z. Zhang, "Bacterial adhesion and biofilms on surfaces," *Progress in Natural Science*, vol. 18, no. 9, pp. 1049–1056, 2008.

[92] M. Jamal, W. Ahmad, S. Andleeb, F. Jalil, M. Imran, M. A. Nawaz, T. Hussain, M. Ali, M. Rafiq, and M. A. Kamil, "Bacterial biofilm and associated infections," *Journal of the Chinese Medical Association*, 2017.

[93] I. Olsen, "Biofilm-specific antibiotic tolerance and resistance," *European Journal of Clinical Microbiology & Infectious Diseases*, vol. 34, no. 5, pp. 877–886, 2015.

[94] P. Sanchez-Vizuete, B. Orgaz, S. Aymerich, D. Le Coq, and R. Briandet, "Pathogens protection against the action of disinfectants in multispecies biofilms," *Frontiers in microbiology*, vol. 6, p. 705, 2015.

[95] P. Di Ciccio, A. Vergara, A. Festino, D. Paludi, E. Zanardi, S. Ghidini, and A. Ianieri, "Biofilm formation by staphylococcus aureus on food contact surfaces: Relationship with temperature and cell surface hydrophobicity," *Food Control*, vol. 50, pp. 930–936, 2015.

[96] A. L. S. d. Santos, A. C. M. Galdino, T. P. d. Mello, L. d. S. Ramos, M. H. Branquinha, A. M. Bolognese, J. Columbano Neto, and M. Roudbary, "What are the advantages of living in a community? a microbial biofilm perspective!," *Memórias do Instituto Oswaldo Cruz*, vol. 113, no. 9, 2018.

[97] M. D. Hoffman, L. I. Zucker, P. J. Brown, D. T. Kysela, Y. V. Brun, and S. C. Jacobson, "Timescales and frequencies of reversible and irreversible adhesion events of single bacterial cells," *Analytical chemistry*, vol. 87, no. 24, pp. 12032–12039, 2015.

[98] C. M. Waters and B. L. Bassler, "Quorum sensing: cell-to-cell communication in bacteria," *Annu. Rev. Cell Dev. Biol.*, vol. 21, pp. 319–346, 2005.

[99] R. Kolter and E. P. Greenberg, "Microbial sciences: the superficial life of microbes," *Nature*, vol. 441, no. 7091, p. 300, 2006.

[100] A. Persat, C. D. Nadell, M. K. Kim, F. Ingremeau, A. Siryaporn, K. Drescher, N. S. Wingreen, B. L. Bassler, Z. Gitai, and H. A. Stone, "The mechanical world of bacteria," *Cell*, vol. 161, no. 5, pp. 988–997, 2015.

[101] O. E. Petrova and K. Sauer, "Escaping the biofilm in more than one way: desorption, detachment or dispersion," *Current opinion in microbiology*, vol. 30, pp. 67–78, 2016.

[102] E. M. Jones, C. A. Cochrane, and S. L. Percival, "The effect of ph on the extracellular matrix and biofilms," *Advances in wound care*, vol. 4, no. 7, pp. 431–439, 2015.

[103] Y. Liu, H. Tang, Z. Lin, and P. Xu, "Mechanisms of acid tolerance in bacteria and prospects in biotechnology and bioremediation," *Biotechnology advances*, vol. 33, no. 7, pp. 1484–1492, 2015.

[104] Y.-H. Li, M. N. Hanna, G. Svensäter, R. P. Ellen, and D. G. Cvitkovitch, "Cell density modulates acid adaptation in streptococcus mutans: implications for survival in biofilms," *Journal of bacteriology*, vol. 183, no. 23, pp. 6875–6884, 2001.

[105] I. Klapper, C. J. Rupp, R. Cargo, B. Purvedorj, and P. Stoodley, "Viscoelastic fluid description of bacterial biofilm material properties," *Biotechnology and bioengineering*, vol. 80, no. 3, pp. 289–296, 2002.

[106] N. Billings, A. Birjiniuk, T. S. Samad, P. S. Doyle, and K. Ribbeck, "Material properties of biofilms—a review of methods for understanding permeability and mechanics," *Reports on Progress in Physics*, vol. 78, no. 3, p. 036601, 2015.

[107] B. Kundukad, T. Seviour, Y. Liang, S. A. Rice, S. Kjelleberg, and P. S. Doyle, "Mechanical properties of the superficial biofilm layer determine the architecture of biofilms," *Soft matter*, vol. 12, no. 26, pp. 5718–5726, 2016.

[108] B. Nisbet, I. Sutherland, I. Bradshaw, M. Kerr, E. Morris, and W. Shepperson, "Xm-6: a new gel-forming bacterial polysaccharide," *Carbohydrate polymers*, vol. 4, no. 5, pp. 377–394, 1984.

[109] P. J. HERALD and E. A. ZOTTOLA, "Attachment of listeria monocytogenes to stainless steel surfaces at various temperatures and ph values," *Journal of Food science*, vol. 53, no. 5, pp. 1549–1562, 1988.

[110] L. Townsley and F. H. Yildiz, "Temperature affects c-di-gmp signalling and biofilm formation in v ibrio cholerae," *Environmental microbiology*, vol. 17, no. 11, pp. 4290–4305, 2015.

[111] H. Nguyen, Y. Yang, and H. Yuk, "Biofilm formation of salmonella typhimurium on stainless steel and acrylic surfaces as affected by temperature and ph level," *LWT-Food Science and Technology*, vol. 55, no. 1, pp. 383–388, 2014.

[112] K. Marion-Ferey, M. Pasmore, P. Stoodley, S. Wilson, G. Husson, and J. W. Costerton, "Biofilm removal from silicone tubing: an assessment of the efficacy of dialysis machine decontamination procedures using an in vitro model," *Journal of Hospital Infection*, vol. 53, no. 1, pp. 64–71, 2003.

[113] K. Hori and S. Matsumoto, "Bacterial adhesion: from mechanism to control," *Biochemical Engineering Journal*, vol. 48, no. 3, pp. 424–434, 2010.

[114] M. Fletcher and D. C. Savage, "Bacterial adhesion: mechanisms and physiological significance," 2013.

[115] A. Silva-Dias, I. M. Miranda, J. Branco, M. Monteiro-Soares, C. Pina-Vaz, and A. G. Rodrigues, "Adhesion, biofilm formation, cell surface hydrophobicity, and antifungal planktonic susceptibility: relationship among candida spp.," *Frontiers in microbiology*, vol. 6, p. 205, 2015.

[116] C. Van Oss, "The forces involved in bioadhesion to flat surfaces and particles—their determination and relative roles," *Biofouling*, vol. 4, no. 1-3, pp. 25–35, 1991.

[117] R. Bos, H. C. Van der Mei, and H. J. Busscher, "Physico-chemistry of initial microbial adhesive interactions–its mechanisms and methods for study," *FEMS microbiology reviews*, vol. 23, no. 2, pp. 179–230, 1999.

[118] C. Berne, C. K. Ellison, A. Ducret, and Y. V. Brun, "Bacterial adhesion at the single-cell level," *Nat Rev Microbiol*, vol. 16, pp. 616–27, 2018.

[119] H. Zhu, Z. Guo, and W. Liu, "Adhesion behaviors on superhydrophobic surfaces," *Chemical Communications*, vol. 50, no. 30, pp. 3900–3913, 2014.

[120] Y. Yuan, M. P. Hays, P. R. Hardwidge, and J. Kim, "Surface characteristics influencing bacterial adhesion to polymeric substrates," *RSC Advances*, vol. 7, no. 23, pp. 14254–14261, 2017.

[121] F. Hizal, N. Rungraeng, J. Lee, S. Jun, H. J. Busscher, H. C. van der Mei, and C.-H. Choi, "Nanoengineered superhydrophobic surfaces of aluminum with extremely low bacterial adhesivity," *ACS applied materials & interfaces*, vol. 9, no. 13, pp. 12118–12129, 2017.

[122] F. Song, H. Koo, and D. Ren, "Effects of material properties on bacterial adhesion and biofilm formation," *Journal of dental research*, vol. 94, no. 8, pp. 1027–1034, 2015.

[123] T. Cai, X. Li, C. Wan, and T.-S. Chung, "Zwitterionic polymers grafted poly (ether sulfone) hollow fiber membranes and their antifouling behaviors for osmotic power generation," *Journal of Membrane Science*, vol. 497, pp. 142–152, 2016.

[124] L. Mi and S. Jiang, "Integrated antimicrobial and nonfouling zwitterionic polymers," *Angewandte Chemie International Edition*, vol. 53, no. 7, pp. 1746–1754, 2014.

[125] L. C. d. M. Dantas, J. P. d. Silva-Neto, T. S. Dantas, L. Z. Naves, F. D. das Neves, and A. S. da Mota, "Bacterial adhesion and surface roughness for different clinical techniques for acrylic polymethyl methacrylate," *International journal of dentistry*, vol. 2016, 2016.

[126] R. J. Crawford, H. K. Webb, V. K. Truong, J. Hasan, and E. P. Ivanova, "Surface topographical factors influencing bacterial attachment," *Advances in colloid and interface science*, vol. 179, pp. 142–149, 2012.

[127] L. D. Renner and D. B. Weibel, "Physicochemical regulation of biofilm formation," *MRS bulletin*, vol. 36, no. 5, pp. 347–355, 2011.

[128] J. Palmer, S. Flint, and J. Brooks, "Bacterial cell attachment, the beginning of a biofilm," *Journal of industrial microbiology & biotechnology*, vol. 34, no. 9, pp. 577–588, 2007.

[129] J. Azeredo, N. F. Azevedo, R. Briandet, N. Cerca, T. Coenye, A. R. Costa, M. Desvaux, G. Di Bonaventura, M. Hébraud, Z. Jaglic, *et al.*, "Critical review on biofilm methods," *Critical reviews in microbiology*, vol. 43, no. 3, pp. 313–351, 2017.

[130] D. Campoccia, L. Montanaro, and C. R. Arciola, "A review of the biomaterials technologies for infection-resistant surfaces," *Biomaterials*, vol. 34, no. 34, pp. 8533–8554, 2013.

[131] M. Cloutier, D. Mantovani, and F. Rosei, "Antibacterial coatings: challenges, perspectives, and opportunities," *Trends in biotechnology*, vol. 33, no. 11, pp. 637–652, 2015.

[132] S. Qin, K. Xu, B. Nie, F. Ji, and H. Zhang, "Approaches based on passive and active antibacterial coating on titanium to achieve antibacterial activity," *Journal of Biomedical Materials Research Part A*, 2018.

[133] C. L. Romanò, S. Scarponi, E. Gallazzi, D. Romanò, and L. Drago, "Antibacterial coating of implants in orthopaedics and trauma: a classification proposal in an evolving panorama," *Journal of orthopaedic surgery and research*, vol. 10, no. 1, p. 157, 2015.

[134] E. M. Hetrick and M. H. Schoenfisch, "Reducing implant-related infections: active release strategies," *Chemical Society Reviews*, vol. 35, no. 9, pp. 780–789, 2006.

[135] I. Zhuk, F. Jariwala, A. B. Attygalle, Y. Wu, M. R. Libera, and S. A. Sukhishvili, "Self-defensive layer-by-layer films with bacteria-triggered antibiotic release," *ACS nano*, vol. 8, no. 8, pp. 7733–7745, 2014.

[136] Y. Lu, Y. Wu, J. Liang, M. R. Libera, and S. A. Sukhishvili, "Self-defensive antibacterial layer-by-layer hydrogel coatings with ph-triggered hydrophobicity," *Biomaterials*, vol. 45, pp. 64–71, 2015.

[137] M. Neqal, J. Fernandez, V. Coma, M. Gauthier, and V. Héroguez, "ph-triggered release of an antifungal agent from polyglycidol-based nanoparticles against fuel fungus h. resinae," *Journal of colloid and interface science*, vol. 526, pp. 135–144, 2018.

[138] V. V. Komnatnyy, W.-C. Chiang, T. Tolker-Nielsen, M. Givskov, and T. E. Nielsen, "Bacteria-triggered release of antimicrobial agents," *Angewandte Chemie International Edition*, vol. 53, no. 2, pp. 439–441, 2014.

[139] G. Cado, R. Aslam, L. Séon, T. Garnier, R. Fabre, A. Parat, A. Chassepot, J.-C. Voegel, B. Senger, F. Schneider, *et al.*, "Self-defensive biomaterial coating against bacteria and yeasts: polysaccharide multilayer film with embedded antimicrobial peptide," *Advanced Functional Materials*, vol. 23, no. 38, pp. 4801–4809, 2013.

[140] N. Song and Y.-W. Yang, "Molecular and supramolecular switches on mesoporous silica nanoparticles," *Chemical Society Reviews*, vol. 44, no. 11, pp. 3474–3504, 2015.

[141] R. Kaur and S. Liu, "Antibacterial surface design–contact kill," *Progress in Surface Science*, vol. 91, no. 3, pp. 136–153, 2016.

[142] J.-B. D. Green, T. Fulghum, and M. A. Nordhaus, "A review of immobilized antimicrobial agents and methods for testing," *Biointerphases*, vol. 6, no. 4, pp. MR13–MR28, 2011.

[143] J. C. Tiller, "Antimicrobial surfaces," in *Bioactive surfaces*, pp. 193–217, Springer, 2010.

[144] J. C. Tiller, C.-J. Liao, K. Lewis, and A. M. Klibanov, "Designing surfaces that kill bacteria on contact," *Proceedings of the National Academy of Sciences*, vol. 98, no. 11, pp. 5981–5985, 2001.

[145] R. Kügler, O. Bouloussa, and F. Rondelez, "Evidence of a charge-density threshold for optimum efficiency of biocidal cationic surfaces," *Microbiology*, vol. 151, no. 5, pp. 1341–1348, 2005.

[146] A. M. Bieser and J. C. Tiller, "Mechanistic considerations on contact-active antimicrobial surfaces with controlled functional group densities," *Macromolecular bioscience*, vol. 11, no. 4, pp. 526–534, 2011.

[147] J. Gao, E. M. White, Q. Liu, and J. Locklin, "Evidence for the phospholipid sponge effect as the biocidal mechanism in surface-bound polyquaternary ammonium coatings with variable cross-linking density," *ACS applied materials & interfaces*, vol. 9, no. 8, pp. 7745–7751, 2017.

[148] I. Banerjee, R. C. Pangule, and R. S. Kane, "Antifouling coatings: recent developments in the design of surfaces that prevent fouling by proteins, bacteria, and marine organisms," *Advanced materials*, vol. 23, no. 6, pp. 690–718, 2011.

[149] E. Ostuni, R. G. Chapman, R. E. Holmlin, S. Takayama, and G. M. Whitesides, "A survey of structure- property relationships of surfaces that resist the adsorption of protein," *Langmuir*, vol. 17, no. 18, pp. 5605–5620, 2001.

[150] R. S. Kane, P. Deschatelets, and G. M. Whitesides, "Kosmotropes form the basis of protein-resistant surfaces," *Langmuir*, vol. 19, no. 6, pp. 2388–2391, 2003.

[151] G.-A. Junter, P. Thébault, and L. Lebrun, "Polysaccharide-based antibiofilm surfaces," *Acta biomaterialia*, vol. 30, pp. 13–25, 2016.

[152] I. Buzzacchera, M. Vorobii, N. Y. Kostina, A. de los Santos Pereira, T. Riedel, M. Bruns, W. Ogieglo, M. Moller, C. J. Wilson, and C. Rodriguez-Emmenegger, "Polymer brush-functionalized chitosan hydrogels as antifouling implant coatings," *Biomacromolecules*, vol. 18, no. 6, pp. 1983–1992, 2017.

[153] B. Kovacs, D. Patko, A. Klein, B. Kakasi, A. Saftics, S. Kurunczi, F. Vonderviszt, and R. Horvath, "Bacteria repellent layer made of flagellin," *Sensors and Actuators B: Chemical*, vol. 257, pp. 839–845, 2018.

[154] S. Yan, S. Luan, H. Shi, X. Xu, J. Zhang, S. Yuan, Y. Yang, and J. Yin, "Hierarchical polymer brushes with dominant antibacterial mechanisms switching from bactericidal to bacteria repellent," *Biomacromolecules*, vol. 17, no. 5, pp. 1696–1704, 2016.

[155] F. Variola, F. Vetrone, L. Richert, P. Jedrzejowski, J.-H. Yi, S. Zalzal, S. Clair, A. Sarkissian, D. F. Perepichka, J. D. Wuest, *et al.*, "Improving biocompatibility of implantable metals by nanoscale modification of surfaces: an overview of strategies, fabrication methods, and challenges," *small*, vol. 5, no. 9, pp. 996–1006, 2009.

[156] M. Zheludkevich, J. Tedim, and M. Ferreira, ""smart" coatings for active corrosion protection based on multi-functional micro and nanocontainers," *Electrochimica Acta*, vol. 82, pp. 314–323, 2012.

Chapter 13

Appendix

13.1 Preparation steps

Preparation of medium	
Medium for E.coli	Medium for L.lactis
Lysogenic broth (LB) for 100ml solution	M17 broth
10g/l peptone 5g/l yeast extract 5g/l NaCl 100 ml demi-water	37.25g/L M17 50mmol glucose (= ml) 100 ml demi-water
Autoclave the solution for 15-20min	

Preparation of Culture	
Cultivation of E.coli	Cultivation of L.lactis
Lysogenic broth (LB) for 100ml solution	M17 broth
100ml of LB 1 cuvette with the microorganism from the freezer	100ml of M17 1 cuvette with the microorganism from the freezer
Solution used in each flask	
200ml of medium $100\mu l$ of culture	

Chemical sterilization process
Chemically sterilize glass and 3D printed flasks
Fill the flasks with 1% chloride (bleach) After 10min empty the flasks
Fill the flasks with 70% ethanol After 10min empty the flasks
Fill the flasks with 50ml of sterilized demi-water Shake the flask for 10sec. by hand Empty the flasks after 30sec.

Preparation of the coating	
Solgel coating	Polymer coating
10ml Tetraethoxysilane (TEOS) 10ml Methyltriethoxysilane (MTES) 10ml 70% Ethanol 10ml Demi-water at 4.5 pH	10ml Resin from the 3D printer 50ml Demi-water
Mix the solution	
Heat the solution in microwave for 10-20sec	
Mix until there is a homogeneous solution	
Put in the oven at 65C for 12h	
Apply the coating on the notch of the 3D printed slide with a pencil	
	Shine with a UV laser pen for 3-5min

13.2 Bacterial growth Data

OD values from growth experiments for E.coli				
Time (h)	3D printed flasks		Glass flasks	
0,5	0,058	0,059	0,057	0,058
1	0,060	0,061	0,063	0,061
1,5	0,069	0,070	0,066	0,073
2	0,075	0,078	0,077	0,087
2,5	0,090	0,098	0,101	0,107
3	0,134	0,119	0,138	0,128
3,5	0,157	0,176	0,185	0,173
4	0,200	0,206	0,266	0,257
4,5	0,262	0,282	0,377	0,317
5	0,411	0,351	0,411	0,499
5,5	0,464	0,456	0,574	0,499
6	0,670	0,615	0,667	0,756
6,5	0,676	0,626	0,760	0,811
7	0,747	0,763	0,856	0,913
24	1,513	1,513	1,413	1,397
26	1,513	1,467	1,351	1,337
27	1,523	1,584	1,416	1,417
28	1,529	1,530	1,370	1,339

Average and standard deviation of the growth data for E.coli				
Time (h)	AVG 3D printed	AVG Glass	STDEV 3D printed	STDEV Glass
0,5	0,058	0,058	0,000	0,001
1	0,060	0,062	0,000	0,001
1,5	0,069	0,069	0,001	0,005
2	0,076	0,082	0,002	0,006
2,5	0,094	0,104	0,005	0,004
3	0,126	0,133	0,010	0,007
3,5	0,167	0,179	0,014	0,008
4	0,203	0,261	0,004	0,007
4,5	0,272	0,347	0,014	0,042
5	0,381	0,455	0,042	0,063
5,5	0,460	0,536	0,006	0,053
6	0,643	0,711	0,039	0,063
6,5	0,651	0,651	0,786	0,035
7	0,651	0,786	0,035	0,036
24	0,755	0,884	0,011	0,040
26	1,513	1,405	0,000	0,011
27	1,490	1,344	0,033	0,009
28	1,554	1,416	0,043	0,001

OD values for uncultured flasks for E.coli						
Time (h)	3D printed flasks		AVG	Glass flasks		AVG
0,5	0,047	0,045	0,046	0,047	0,044	0,046
1	0,047	0,043	0,045	0,047	0,044	0,045
1,5	0,046	0,049	0,048	0,047	0,043	0,045
2	0,047	0,045	0,046	0,046	0,042	0,044
2,5	0,046	0,045	0,046	0,048	0,044	0,046
3	0,056	0,054	0,055	0,047	0,044	0,045
3,5	0,048	0,044	0,046	0,046	0,042	0,044
4	0,047		0,047	0,049		0,049
4,5	0,047		0,047	0,048		0,048
5	0,046		0,046	0,049		0,049
5,5	0,046		0,046	0,049		0,049

13.3 Technical drawings

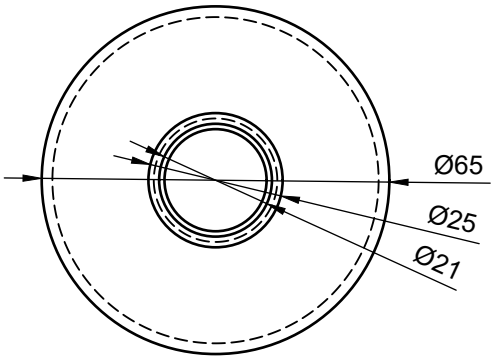

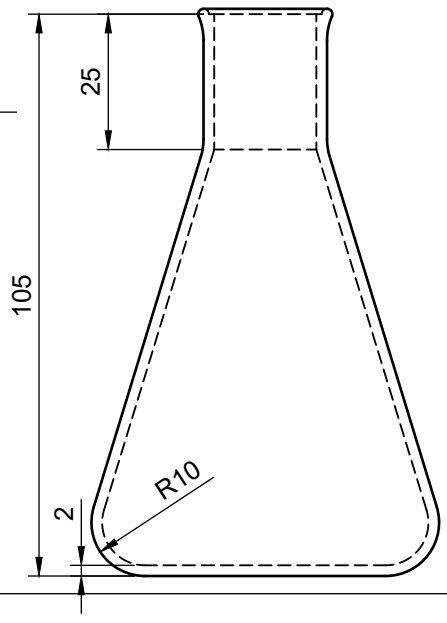

Dept.	Technical reference	Created by	Approved by
		Elmar Teeuwen 23-11-2018	
		Document type	Document status
		Title: Erlenmeyer 100ml	DWG No.
			Rev. / Date of issue: 2018 / Sheet: 1/1

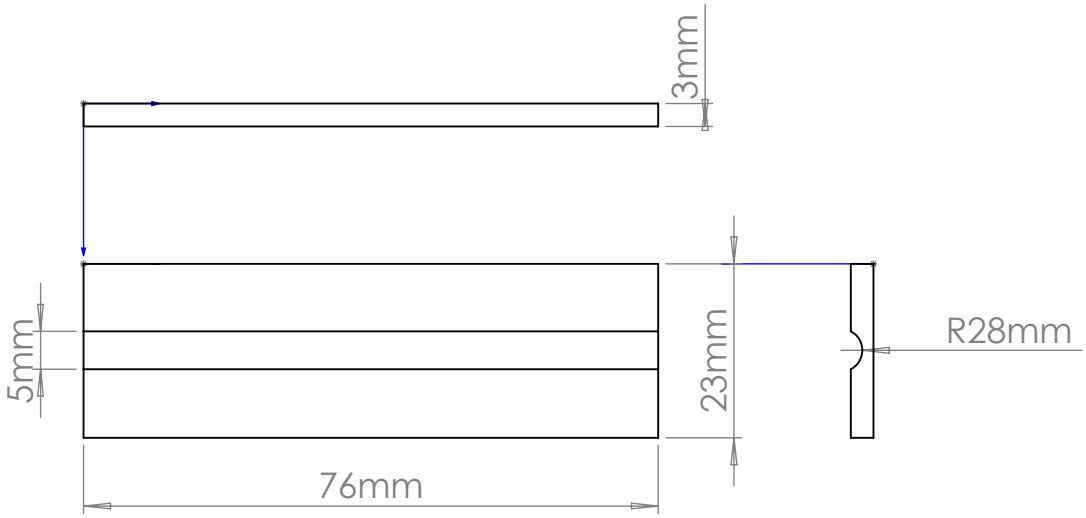

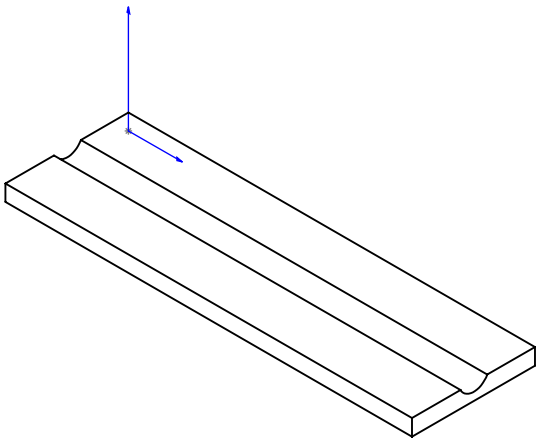

UNLESS OTHERWISE SPECIFIED: DIMENSIONS ARE IN MILLIMETERS SURFACE FINISH: TOLERANCES: LINEAR: ANGULAR:	FINISH:	DEBURR AND BREAK SHARP EDGES	DO NOT SCALE DRAWING / REVISION

	NAME	SIGNATURE	DATE
DRAWN			
CHK'D			
APPV'D			
MFG			
Q.A			

TITLE:

MATERIAL:

DWG NO. Microscope slide

A4

WEIGHT:

SCALE:1:1

SHEET 1 OF 1

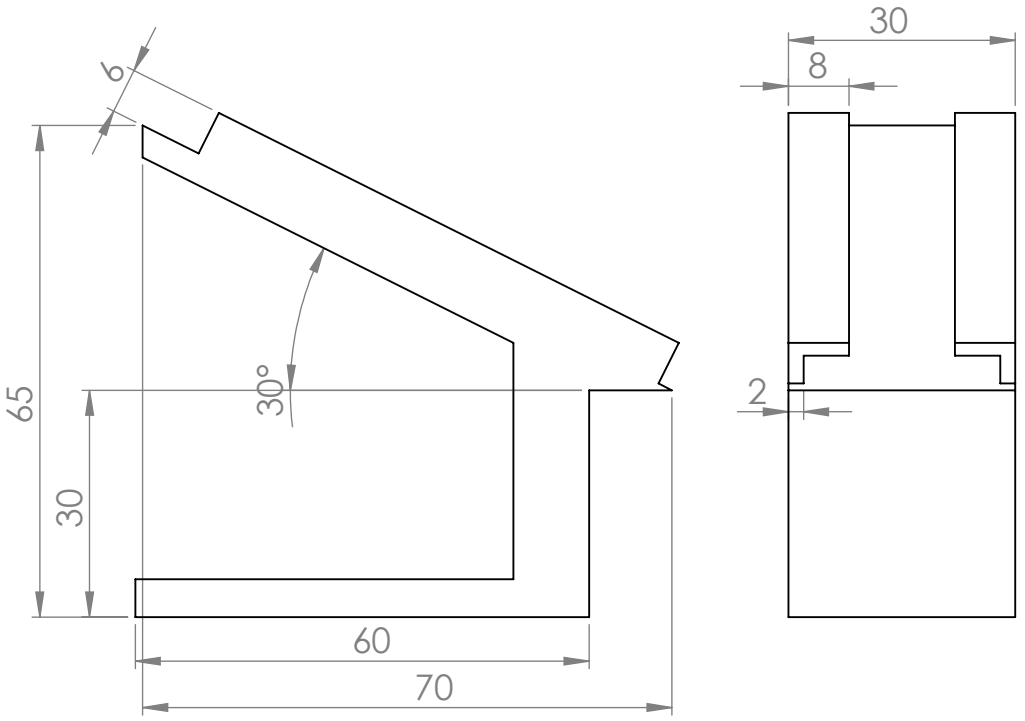

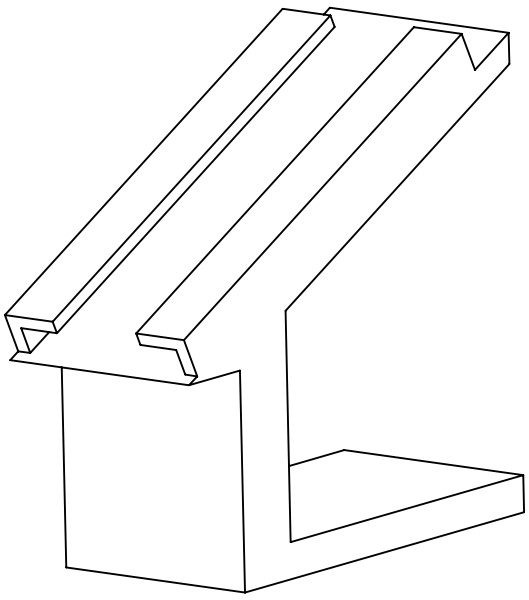

UNLESS OTHERWISE SPECIFIED: DIMENSIONS ARE IN MILLIMETERS SURFACE FINISH: TOLERANCES: LINEAR: ANGULAR:	FINISH:	DEBURR AND BREAK SHARP EDGES	DO NOT SCALE DRAWING	REVISION			
	NAME	SIGNATURE	DATE				TITLE:
DRAWN							
CHK'D							
APPV'D							
MFG							
Q.A				MATERIAL:			DWG NO. standard3
							A4
				WEIGHT:		SCALE:1:2	SHEET 1 OF 1